VTS6D-G Vibration Tilt Angle Sensor

Product manual

V1.5-20250409

Product Introduction

The VTS6D-G is a high-precision industrial-grade sensor developed by RUICOM Technology specifically for the field of vibration and tilt angle measurement. All products undergo rigorous full-temperature-range calibration compensation and stability testing over a certain period before leaving the factory, ensuring exceptional measurement performance under various environmental condition. Equipped with an inbuilt Fast Fourier Transform (FFT) algorithm, it can accurately detect mechanical vibrations within the 0.5~20Hz range, enabling precise calculation of the peak velocity and maximum displacement amplitude of vibrating bodies through frequency analysis.

The device supports multiple communication protocols, including the industrial-standard MODBUS protocol, and is equipped with professional data analysis software, enabling real-time monitoring, recording, and in-depth analysis of measurement data. It offers various interface configuration options such as RS485/RS422/RS232 to meet diverse industrial application needs. Featuring a non-contact installation design, the sensor can be securely mounted on the target surface with just screws, automatically performing horizontal tilt angle calculations to significantly enhance deployment efficiency.

With excellent electromagnetic interference resistance and outstanding mechanical shockproof performance, the VTS series has been successfully applied to high-end mobile platforms such as satellite communication vehicles, special command vehicles, and radar antenna vehicles, providing reliable solutions for attitude measurement in complex environments.

Main Features

- ❖ Dual axis inclination measurement
- ❖ Range ±10°
- ❖ Accuracy: 0.001°
- ❖ Horizontal/vertical optional
- ❖ Resolution: 0.0005°
- ❖ Aviation plug connector

Main Applications

- ❖ Wind power monitoring
- ❖ Bridge and Dam monitoring
- ❖ High speed railway track monitoring
- ❖ Railway gauge ruler and gauge leveling
- ❖ Satellite communication vehicle
- ❖ Geological equipment tilt monitoring

Performance Parameters

VTS6D-G	Parameters
Measure range	±10°
Measure axis	XY
Resolution [1)]	0.0005°
Measure accuracy [2)]	0.001°
Zero temp coefficient [3)]	0.0003°/℃
Sensitivity temp. coefficient [4)]	≤50ppm/℃
Power on time	<0.5S
Response frequency	20Hz
Output rate	5Hz / 10Hz / 25Hz / 35Hz / 50Hz / 100Hz Can be set
Output signal	RS485/RS232/RS422 Optional
EMC	According to EN61000 and GBT17626
Insulation Resistance	≥100 MΩ
Shockproof	100g@11ms / 3 Axial Direction (Half Sinusoid)
Anti-vibration	10grms / 10~1000Hz
Protection grade	IP67
Cables	Standard configuration: 2-meter cable/weight ≤ 194g
Weight	≤425g (Excluding cable)

1) Resolution: refers to the minimum angle change that a sensor can recognize within its effective range, reflecting its ability to monitor small tilt angle fluctuations.
2) Accuracy: At a standard ambient temperature (25 ±5℃), multiple repeated measurements are taken at a fixed angle (sample size ≥ 16), and the root mean square (RMS) error between the measured value and the true value is calculated to characterize the comprehensive measurement deviation of the sensor.
3) Zero point temperature coefficient: The ratio of the output value of a sensor in a zero input state to the temperature change, defined as the ratio of the zero point offset within the rated operating temperature range to the reference value at room temperature.
4) Sensitivity temperature coefficient: a stability index of the full-scale output value of a sensor as a function of temperature, which characterizes the drift rate of sensitivity relative to the reference value at room temperature within the rated temperature range.

Electrical Parameters

Parameters	Condition	Min	Standard		Max	Unit
Power supply	Standard	9	12	24	36	V
Working current	12V		16			mA
	24V		11			mA
Working temp		-40			+85	℃
Store temp		-40			+85	℃

Order Information

Model	Range		Signal output	protocol		Installation direction
VTS6D -G	10: ±10°	-	232: RS232	SP:Serial communication protocol	-	H: Horizontal installation
			485: RS485	MB:MODBUS protocol		V: Vertical installation
			422: RS422			

E.g: VTS6D-G10-232SP-H:±10° measurement range/ 232 signal output/SP serial communication protocol/horizontal installation.

Working Principle of Tilt Angle

Adopting imported core control unit and utilizing the principle of capacitive micro pendulum. Using the principle of Earth's gravity, when the tilt unit tilts, the Earth's gravity will produce a component of gravity on the corresponding pendulum, and the corresponding capacitance will change. By amplifying, filtering, and converting the capacitance, the tilt angle can be obtained.

Sensors are affected by G values and their accuracy may vary in different regions. Please make sure to set the latitude value before use, and refer to the protocol section for setting commands.

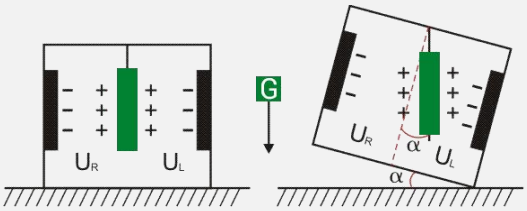

U_R and U_L represent the voltage between the left and right pole plates of the pendulum and their respective electrodes. When the tilt sensor tilts, U_R and U_L will change according to a certain pattern. Therefore, $\int (U_R, U_L)$ is a function of the tilt angle α: $\alpha = \int (U_R, U_L)$

Vibration Working Principle

The change in the motion state of an object will generate acceleration. Using the frequency spectrum conversion method, the acceleration spectrum is first converted into a displacement spectrum, and the amplitude, circular frequency, and initial phase angle corresponding to each frequency component in the displacement spectrum are calculated. Finally, the vibration displacement is obtained by superimposing each displacement component.

Vibration Parameter Indicators

The vibration frequency, velocity, and displacement of this product are obtained from data analysis, where frequency is the main frequency of the current object vibration frequency, velocity is the maximum velocity, and displacement is the maximum amplitude value of the object vibration. Due to the irregularity of the object vibration, the data is only for reference.

Indicator	Parameter	Unit
Acceleration range	2	g
Acceleration accuracy	1	mg
Measurement frequency range	0~20	Hz
frequency resolution	0.125	Hz
Measurement error (± 10%)	0~8	Hz

Wiring Definition

RS232/RS485 Pin color definition

Pin/Wire color	Definition	Description
PIN1 / Red	DC9~36V	Positive power terminal
PIN2 / Black	GND	Negative terminal of power supply
PIN3 / White	RS232_RXD / RS485_D+	--
PIN4 / Green	RS232_TXD / RS485_D-	--
PIN5 / Grey	Signal Ground	Signal ground
PIN6 / --	--	Internal use in the factory
PIN7 / --	--	Internal use in the factory

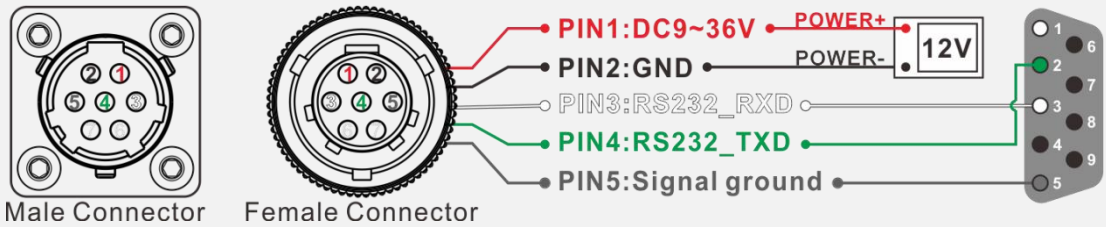

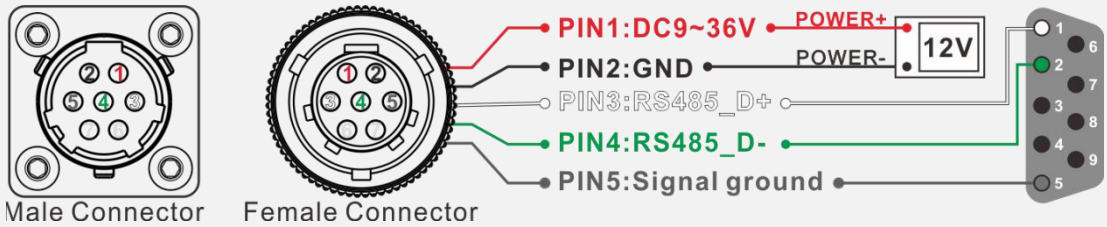

RS422 Pin color definition

Pin/Wire color	Definition	Description
PIN1 / Red	DC9~36V	Positive power terminal
PIN2 / Black	GND	Negative terminal of power supply
PIN3 / Orange	RS422_RXD+	--
PIN4 / Yellow	RS422_RXD-	--
PIN5 / Blue	RS422_TXD+	--
PIN6 / White	RS422_TXD-	--
PIN7 / Grey	Signal Ground	Signal ground
PIN8 / --	--	Internal use in the factory
PIN9 / --	--	Internal use in the factory

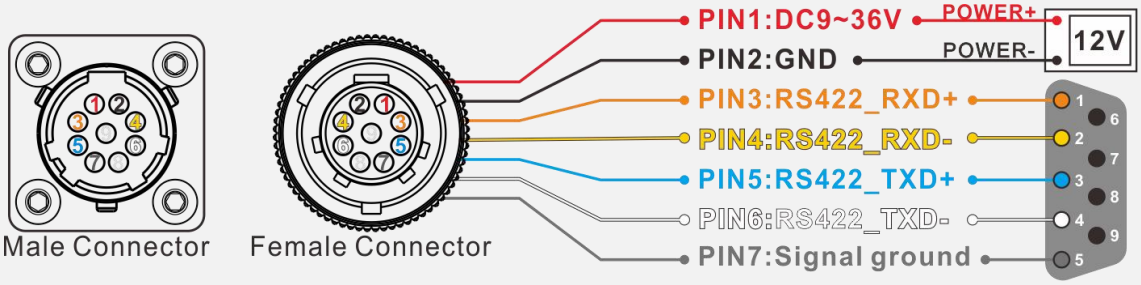

Product Dimensions

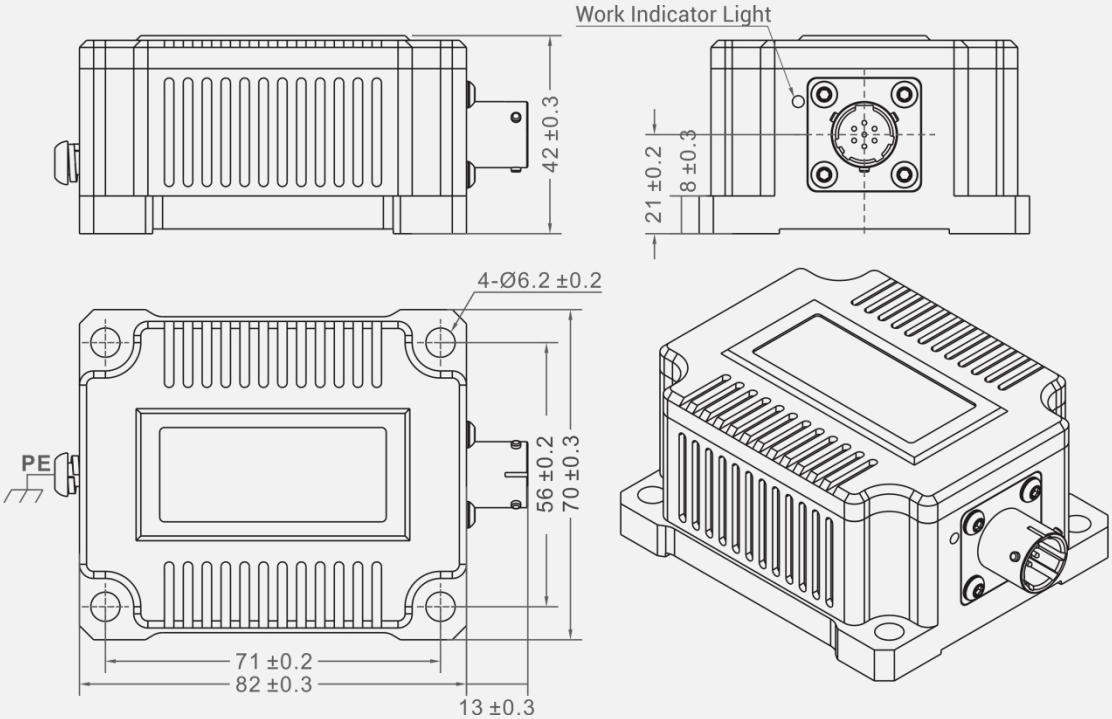

Shell dimensions: L95×W70×H42mm
Suggested screws: 4 M6 screws

Measurement Direction

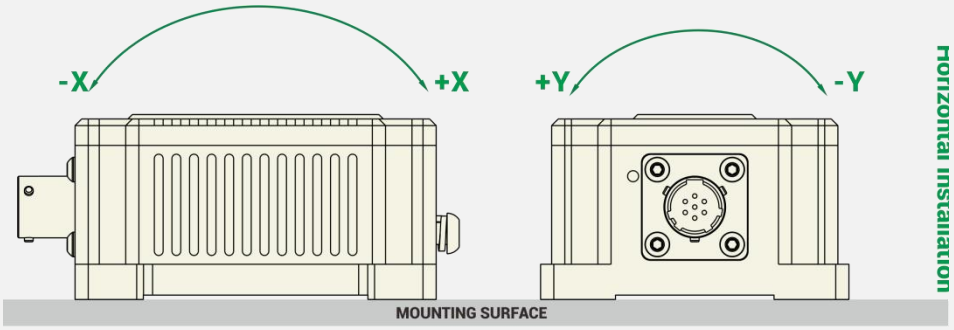

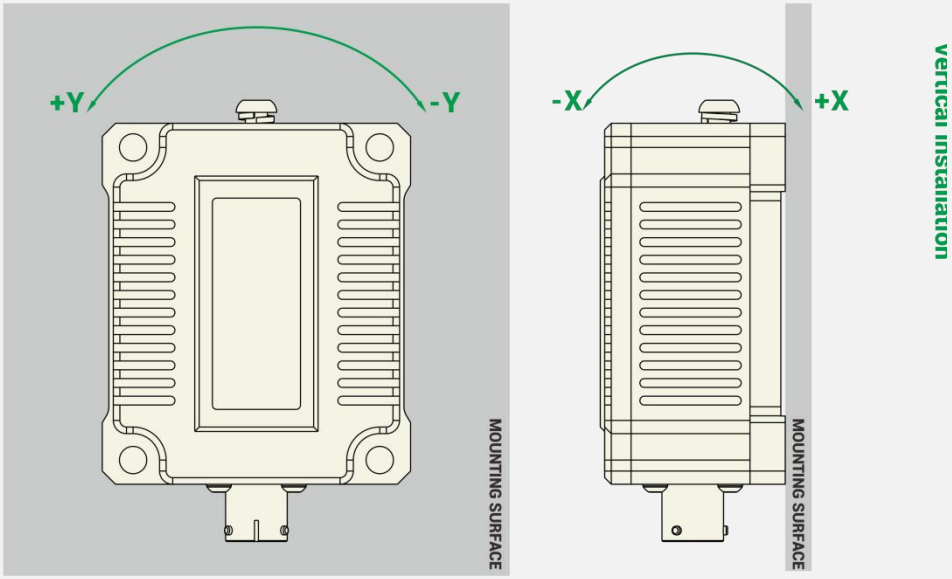

Function Description of Indicator Light

The red work indicator light is always on when powered on and flashes during communication.

Legend of Vibration Swing Measurement

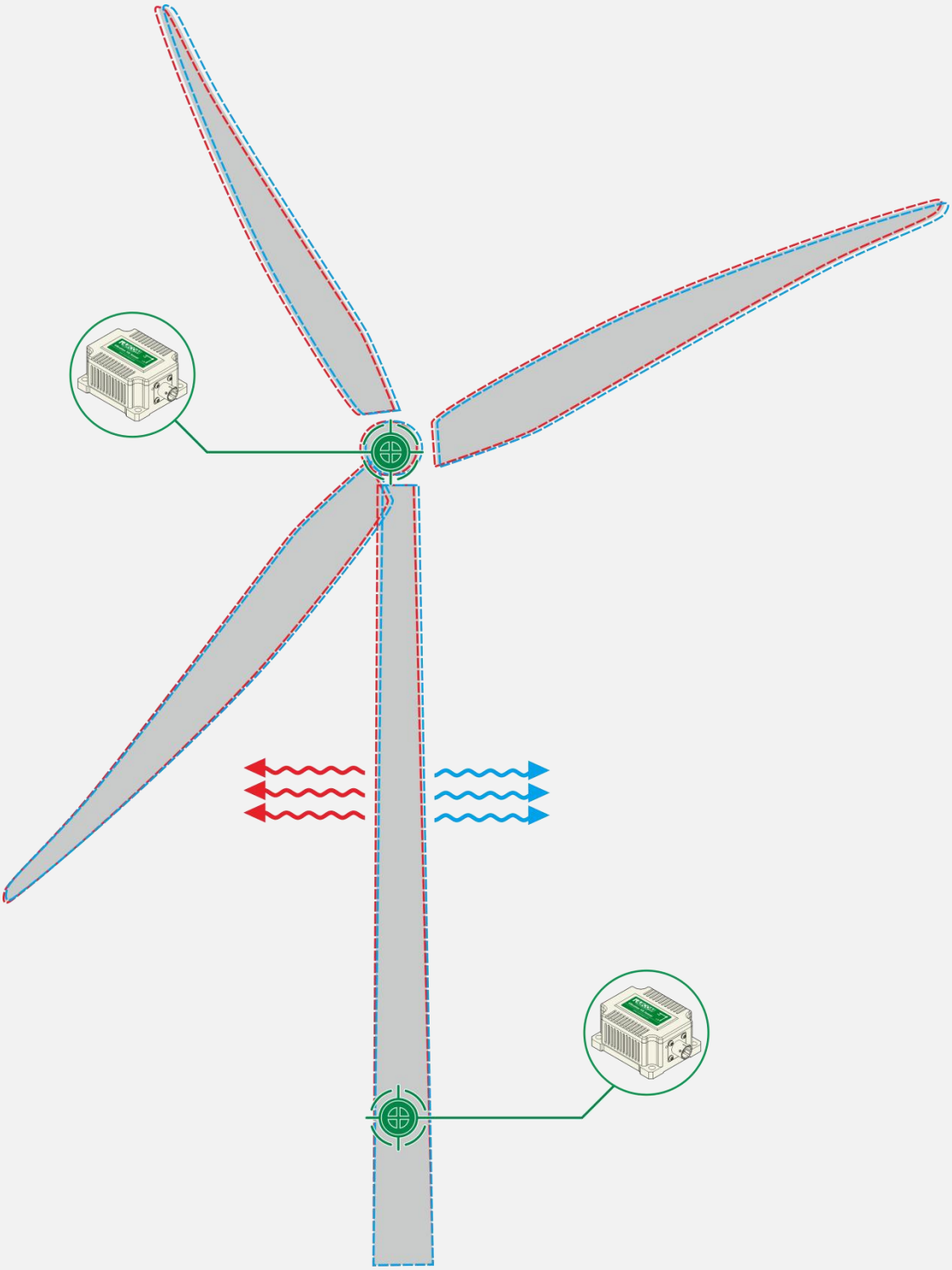

Communication Protocol

The product includes two protocols: serial communication protocol and MODBUS RTU protocol. The default configuration parameters for the protocols are as follows:

Protocol	Serial communication protocol	MODBUS-RTU
Address code	0	1
Broadcast address	255	0
Baud rate	9600	9600
Parity bit	No parity	Even parity
start bit	1 bit	1 bit
data length	8 bits	8 bits
stop bit	1 bit	1 bit
Output mode	Q&A	Q&A
Data Format	Data format	Data format
Data check method	Check sum	CRC16

❖ **Serial Communication Protocol**

1. Data frame format:

Identifier (1byte)	Date Length (1byte)	Addr code (1byte)	Cmd Word (1byte)	Date domain	Check sum (1byte)
68					

Default parameters: address 0, baud rate 9600, 1 start bit, 8 data, no parity, 1 stop bit.

Valid setting address: 0~254;

Identifier: fixed as 0x68;

Data length: the length from data length to checksum (including checksum);

Data field: according to the different content and length of the command word changes accordingly;

Checksum: The sum of data length, address code, command word and data field, regardless of carry, that is, Sum&0xFF.

Note, please read the description below carefully before using:
1> To ensure normal communication, please leave a time interval of 10ms between each data frame. The host sends a command -- 10ms idle -- the slave replies to the command -- 10ms idle -- the host sends a command...
2> The protocol stipulates the broadcast address----255, the sensor can also accept the content of the broadcast address, but will not reply (except for the function of reading the address code). Therefore, the broadcast address 255 can be used for the following purposes, for reference only.
1. Set the addresses of all the tilt sensors of this model mounted on the bus to a certain address.
2. Set all the tilt sensors of this model mounted on the bus to relative/absolute zero point.
3. Test the sensor of this type on the entire bus, that is, the host sends a 255 address to the bus to inquire the angle command, and the communication indicate light can flash, then the communication is normal.
3> Setting instructions and procedures
1. All setting operations will not be saved when power is off, and the command setting will be effective immediately. If you need to save, you need to send a save command.
2. The operation is to send a setting command → return successfully, the setting takes effect → send a save command -> return successfully, the setting is saved.
4> when normal communication, the indicator flashes once every 1S.

2.COMMAND word analysis

CMD	Meaning/Example	Description
0X01	**Read X angle command** e.g.: ***68 04 00 01 05***	Data field (0byte) No data field command
0X81	sensor reply e.g.: **68 08 00 81 00 00 20 08 B1**	Parse the same as 0x04 command
0X02	**Read Y angle command** e.g.: ***68 04 00 02 06***	Data field (0byte) Return data format, parse as X angle
0X03	**Read temp. command** e.g.: ***68 04 00 03 07***	Data field (0byte) Return data format, parse as X angle
0X04	**Read X,Y and temp. command** e.g.: ***68 04 00 04 08***	Data field (0byte) No data field command
0X84	sensor reply e.g.: **68 10 00 84 00 00 20 08 10 00 25 28 10 35 00 80 DE**	Data field (12 byte) **00 00 20 08** The four red bytes are the X-axis return angle value, which is the compressed BCD code. The high bit **0** of the first byte is the sign bit (0 is positive, 1 is negative) **00 0** is a three-digit integer value, and **20 08** is four decimal places. The analysis method for other axis data is the same; this angle is resolved as +000.2008°. The blue Y-axis angle and green temperature data analysis methods are the same. **DE** checksum, the hexadecimal sum of all data, without prefix 68, if more than one byte, take the low byte.
0X14	**Read 3 axes acceleration** e.g.: ***68 04 00 14 18***	Data field (0byte) No data field command
0X94	sensor reply e.g.: **68 10 01 94 10 00 02 60 00 00 00 08 00 00 09 61 89**	Data field (12 byte) **10 00 02 60** The four red bytes are the X-axis acceleration, which is the compressed BCD code. The high-order **1** of the first byte is the sign bit (0 is positive, 1 is negative) **0 00 0** is a four-bit integer value, **2 60** is three decimal value. The other axis data is resolved in the same way; this acceleration resolves to +000.260g. The blue Y-axis acceleration and green Z-axis acceleration have the same analytical methods. **89** Checksum, the hexadecimal sum of all data, excluding header 68, if more than one byte, take the low byte.
0X15	**Read 3 axes frequency** e.g.: ***68 04 00 15 19***	Data field (0byte) Return data format, parse as 0X14 command
0X16	**Read 3 axes vibration speed** e.g.: ***68 04 00 16 1A***	Data field (0byte) Return data format, parse as 0X14 command
0X17	**Read 3 axes vibration displacement** e.g.: ***68 04 00 17 1B***	Data field (0byte) Return data format, parse as 0X14 command
0X18	**Read angle, temperature, acceleration, vibration frequency, vibration speed, vibration displacement data**	Data field (0byte) No data field command

	e.g.: ***68 04 00 18 1C***	
0X98	sensor reply e.g.: **68 40 00 98 10 10 01 10 01 00 00 00 00 00 00 00 00 00 10 87 31 30 37 30 38 41 90 00 00 00 00 00 00 00 00 00 00 00 00 00 00 00 00 00 00 00 00 00 00 00 00 00 00 00 00 00 00 00 00 00 00 00 00 00 00 00 00 00 72**	Data field (60byte) Each data occupies four bytes, as the data below successively Blue is the X, Y angle and temperature in sequence, parse as the 0x04 command Green is the acceleration data of X, Y, Z in sequence, parse as the 0X14 command Orange is the X, Y, Z vibration frequency data in sequence, and parse as the 0X14 command Red is X, Y, Z vibration velocity data in sequence, and parse as 0X14 command Cyan is the X, Y, Z vibration displacement data in sequence, and parse as the 0X14 command
0X05	**Set relative/absolute zero:** The current angle can be set to zero degrees for relative measurement, or it can be set back to absolute zero degrees. e.g.: ***68 05 00 05 00 0A***	Data field (1byte) 00:absolute zero 01:relative zero
0X85	sensor reply command e.g.: **68 05 00 85 00 8A**	Data field (1byte)The No. in the data field indicates the result of the sensor response 00: set successfully FF: set failed
0X0B	**Set baud rate** **e.g.: *68 05 00 0B 03 13*** power offer and restart to validate the command	Data field (1byte) Baud rate: defaulted value: 9600 00 represent 2400 01 represent 4800 02 represent 9600 03 represent 19200 04 represent 38400 05 represent 115200
0X8B	sensor reply command e.g.: **68 05 00 8B 90**	Data field (1byte)The No. in the data field indicates the result of the sensor response 00: set successfully FF: set failed
0X0C	**Set output mode** Q&A mode: The upper computer needs to send a reading angle command before the sensor responds to the relative angle. Auto output mode: The sensor will automatically output X, Y angle and temperature after power on. If high frequency output is required, please set the baud rate to 115200. e.g.: ***68 05 00 0C 00 11***	Data field(1byte) The factory default value is: 00 00 Q&A mode 01 5Hz Auto output mode 02 10Hz Auto output mode 03 25Hz Auto output mode 04 35Hz Auto output mode 05 50Hz Auto output mode 06 100Hz Auto output mode
0X8C	sensor reply command e.g.: **68 05 00 8C 00 91**	Data field (1byte)The No. in the data field indicates the result of the sensor response 00: set successfully FF: set failed
0X0F	**Set address command**	Data field(1byte)

	The default address of the sensor is 00; 1. If multiple sensors are connected to a set of buses at the same time, such as RS485. Each sensor needs to be set to a different address to achieve separate control and response angles. 2. If the new address is successfully changed, all subsequent commands and the address code in the response packet must be changed to the new address code to take effect, otherwise the sensor will not respond to the command. e.g.: **68 05 00 0F 01 15** Set the address as 01. **68 05 FF 0F 00 13** Use the general address to reset the address to 00	XX module address, the address ranges from 00 to EF. Note: All products have a common address: **FF, if you forget the set address during operation, you can use the FF address to operate the product.**
0X8F	sensor reply command e.g.: **68 05 00 8F 00 94**	Data field (1byte)The No. in the data field indicates the result of the sensor response 00: set successfully FF: set failed
0X53	Save sensor setting parameters e.g.: **68 04 00 53 57**	No data field
0XD3	sensor reply command e.g.: **68 05 00 D3 00 D8**	Data field (1byte)The No. in the data field indicates the result of the sensor response 00: The setting is saved successfully FF: The setting has failed to be saved
0X0D	Query relative/absolute zero point Used to query whether the current zero-degree mode of the sensor is relative zero or absolute zero e.g.: **68 04 00 0D 11**	Data field (0byte) No data field command
0X8D	sensor reply command e.g.: **68 05 00 8D 00 92**	Data field(1byte)The No. in the data field indicates the result of the sensor response 00: Absolute zero 01: Relative zero
0X10	Set the serial port check bit e.g.: **68 05 00 10 00 15**	Data field(1byte) 00: Even parity 01: No parity 02: Odd parity
0X90	sensor reply command e.g.: **68 05 00 90 00 95**	Data field (1byte)The No. in the data field indicates the result of the sensor response 00: set successfully FF: set failed
0X1D	set filter length e.g.: 68 05 00 1D 10 32	Data field (1byte), default 25 Valid values: 10~100
0X9D	The sensor responds to the reply command e.g.: 68 05 00 9D 00 A2	data field (1byte), The number in the data field indicates the result of the sensor response

		00: Setting succeeded FF: Setting failed
0X1C	Set latitude e.g.: **68 08 00 1C 10 23 56 01 AE**	Data field (4byte), default 22.6932 Data analysis is consistent with the angle data method For example -23.5601, the data field is 10 23 56 01
0X9C	The sensor responds to the reply command e.g.: **68 05 01 9C 00 A2**	Data field (1byte)The number in the data field indicates the result of the sensor response 00: set successfully FF: set failed
0X1F	Read the software version number	No data field,
0X9F	sensor reply command e.g.: **68 14 00 9F 52 43 41 38 32 36 54 5F 56 32 31 30 34 30 38 41 A2**	Data field(16byte) The data field is in string format Such as version number: PCA826H_V210408A

❖ **MODBUS Communication Protocol**

MODBUS uses RTU mode, 'big-Endian' represents addresses and data items, adopts CRC16 check data, standard error code. Support 0x03 to read holding registers and 0x06 to write single registers.

1.Data frame format:

Default parameters: address 1, baud rate 9600, 1 start bit, 8 data, even parity, 1 stop bit;

Effective setting address: 1~247;

CRC check: The range is the check of all bytes before the CRC field, using 16-bit CRC check.

2.Type of data:

Type	Description
INT16	Signed 16-bit integer
UINT16	Unsigned 16-bit integer
INT32	Signed 32-bit integer
UINT32	Unsigned 32-bit integer
R	Read only

3.Part of the register table:

Users can adjust the register address and length to access different axis data according to their needs. The register table is as follows:

Register add.	Data content	Type of data	Coefficient	Unit	Remark
40003	X axis angle	UINT32(R)	-	°	Parse as table below
40005	Y axis angle	UINT32(R)	-	°	Parse as table below
40007	Temp data	INT16(R)	0.01	℃	Parse as table below
40008-40009	Reserve	-	-	-	
40010	Serial check digit	UINT16(R)	1	-	0~2
40011-40014	Reserve	-	-	-	
40015	Filter length	UINT16(R)	1	-	12~64
40016	Reserve	-	-	-	
40017	Relative zero	UINT16(R)	1	-	Relative: 0xFF Absolute: 0x00
40018	Product address	UINT16(R)	1	-	1~247

40019	Serial port baud rate	UINT16(R)	1	-	xA0~0XA4
40020	Sensor output mode	UINT16(R)	1	-	0~6
40021	latitude	INT16(R)	0.01	°	-90~90°
40022	Reserve	-	-	-	
40023	X angle	INT32(R)	0.0001	°	Data analysis method: Data value = register data * coefficient.
40025	Y angle	INT32(R)	0.0001	°	
40027	Temp data	INT16(R)	0.01	℃	
40028	X Vibration frequency	UINT16(R)	0.01	HZ	
40029	Y Vibration frequency	UINT16(R)	0.01	HZ	
40030	Z Vibration frequency	UINT16(R)	0.01	HZ	
40031	X acceleration	INT16(R)	0.001	G	
40032	Y acceleration	INT16(R)	0.001	G	
40033	Z acceleration	INT16(R)	0.001	G	
40034	Reserve				
40035	X Maximum vibration speed	UINT32(R)	0.001	mm /s	
40037	Y Maximum vibration speed	UINT32(R)	0.001	mm /s	
40039	Z Maximum vibration speed	UINT32(R)	0.001	mm /s	
40041	X Maximum vibration displacement	UINT32(R)	0.001	mm	
40043	Y Maximum vibration displacement	UINT32(R)	0.001	mm	
40045	Z Maximum vibration displacement	UINT32(R)	0.001	mm	

4.Read angle data:

MODBUS function code 03H, read data command application example 1:

Host query command:		Slave response:		
Sensor address	01H	Sensor address	01H	
Function code	03H	Function code	03H	
Access register first address	00H	Data length 8 bits	0AH	
	02H	Data word 1-4 bytes	50H	X data
Data length 4 words	00H		46H	
	05H		00H	
CRC	2409H		00H	
		Data word 5-8 bytes	23H	Y data
			20H	
			00H	
			00H	
		Data word 9-10 bytes	03	Temp.

			57	
		CRC	FA0EH	

Example of reading measurement data command1:								
Host sending	01H	03H	00H	02H	00H	05H	24H	09H
Slave response	01H	03H	0AH	50H	46H	00H	00H	23H
	20H	00H	00H	03H	57H	FAH	0EH	

Note: The data field of the slave reply frame is composed of 50H, 46H, 00H, 00H, 23H, 20H, 00H, 00H, 03H, and 57H

The X-axis represents the 1st to 4th bytes of the data field, while the Y-axis represents the 5th to 8th bytes, with the lower bytes preceding. The angle is represented using a point system, where one point corresponds to 0.0001°. The angle is calculated as 0.0001 × (point count - offset). For example, if the measurement range is ±10°, there are a total of 200,000 points. Therefore, 0 corresponds to -10°, 200,000 corresponds to +10°, and 100,000 corresponds to 0°.

Taking the aforementioned data frame as an example, the process of angle conversion is as follows:

1) Obtain the current angle point value. Note that the low byte comes first, with the X-axis value being 00004650H and the Y-axis value being 00002023H.

2) Convert to decimal: X-axis: 00004650H → 18000, Y-axis: 00002023H → 8227.

3) Subtract the offset of 100000 (Note: This value is related to the measurement range. Multiply the measurement range value by 10000. If the offset for a measurement range of ±10° is 10*10000, and the offset for a measurement range of ±30° is 30*10000), X-axis: 18000-100000=-82000, Y-axis: 8227-100000=-91773.

4) Obtain the final angle, X-axis: -82000 × 0.0001 = -8.200°, Y-axis: -91773 × 0.0001 = -9.1773°.

The temperature is the 9th to 10th bytes of the data field, and the temperature point number is 0357H->855, which means the temperature is: 855 * 0.01 = 8.55℃.

5.Set the sensor relative / absolute zero:

MODBUS function code 06H

Set relative/absolute ZERO commands		Slave response :	
Sensor address	01H	Sensor address	01H
Function code	06H	Function code	06H
Access register first address	00H	Register Address	00H
	10H		10H
If the word is non-zero, it is a relative zero, and if it is zero, it is an absolute zero	00 H	If the word is non-zero, it is a relative zero point, and if it is zero, it is an absolute zero point	00H
	FFH / 00H Relative/ absolute		FFH / 00H Relative/ absolute
CRC	C84FH/ 880FH	CRC	C84FH/ 880FH

Commands must be sent twice in succession to be effective

Example of Set relative/absolute ZERO Command:								
Host sending	01 H	06 H	00 H	10 H	00 H	FFH	C8H	4FH
Slave response	01 H	06 H	00 H	10 H	00 H	FFH	C8H	4FH

Note: 0010 is the register address. This register controls the sensor output to be relative zero or absolute zero. If it is non-zero (as in the above example, 00FFH is written), the output is relative zero. Conversely, if it is zero (change the 5th and 6th bytes to 00H), it is an absolute zero. The last two bytes are the CRC checksum.

6.Set sensor address :(sensor address default is 1)

set sensor address code commands :		Slave response :	
Sensor address	01H	Sensor address	01H
Function code	06H	Function code	06H
Address	00H	Register Address	00H
	11H		11H
Sensor new address	00 H	Sensor new address	00 H
	04H		04H
CRC	D80C	CRC	D80C

Commands must be sent twice in succession to be effective

Example of command to set sensor address:								
Host sending	01H	06H	00H	11H	00H	04H	D8H	0CH
Slave response	01H	06H	00H	11H	00H	04H	D8H	0CH

Note: 0011H is the register address, this register controls the sensor address. In the above example, the address of the sensor is changed to 0004H, and the last two bytes are the CRC checksum.

7.Set sensor baud rate : (factory default 9600bps)

Sensor serial port baud rate set command		Slave response :	
Sensor address	01H	Sensor address	01H
Function code	06H	Function code	06H
Address	00H	Register Address	00H
	12H		12H
Sensor baud rate	00H	Sensor baud rate	00H
	XX		XX
CRC	CRC LH	CRC	CRC LH

XX : A0H:4800 A1H:9600 A2H:19200 A3H:38400 A4H:115200

Commands must be sent twice in succession to be effective

Application example of setting Sensor serial port baud rate command:								
Host sending	01H	06H	00H	12H	00H	A2H	A8H	76H
Slave response	01H	06H	00H	12H	00H	A2H	A8H	76H

Note: 0012H is the register address, which controls the sensor baud rate. In the above example, the baud rate of the sensor is set to 19200, and the last two bytes are the CRC checksum.

8.Set the parity bit of the sensor serial port: (factory default is even parity)

Command to set the parity bit:		Slave response:	
Sensor address	01H	Sensor address	01H
Function code	06H	Function code	06H
Address	00H	Register Address	00H
	09H		09H
Sensor serial port parity bit	00H	Sensor serial port parity bit	00H
	01H		01H
CRC	9808	CRC	9808

Example of setting the parity bit command:								
Host sending	01H	06H	00H	09H	00H	01H	98H	08H
Slave response	01H	06H	00H	09H	00H	01H	98H	08H

The above example is to set the byte format to: one start bit + 8 data bits, no parity, + 1 stop bit.

It is effective after power-on again. The factory default is one start bit + 8 data bits, even parity check + 1 stop bit.

Note: 0009 is Register Address, which controls the parity bit of the sensor serial port.

0000H: One start bit + 8 data bits, even parity +1 stop bit.

0001H: One start bit + 8 data bits No parity + 1 stop bit.

0002H: One start bit + 8 data bits, odd parity check + 1 stop bit.

9.Set sensor output mode: (factory default 0HZ)

Command to set sensor output mode:		slave response:	
Sensor address	01H	Sensor address	01H
Function code	06H	Function code	06H
Address	00H	Register Address	00H
	13H		13H
Sensor output mode	00H	Sensor output mode	00H
	XX		XX
CRC	CRC LH	CRC	CRC LH

XX: 00H: Q&A mode 01H: 5Hz 02H: 10Hz 03H: 25Hz
04H: 35Hz 05H: 50Hz 06H: 100Hz

Set sensor output mode command example:								
Host sending	01H	06H	00H	13H	00H	02H	F9H	CEH
Slave response	01H	06H	00H	13H	00 H	02H	F9H	CEH

Note: 0013H is Register Address, which controls the sensor output mode. In the above example, the sensor is set to 25HZ output, and the last two bytes are the CRC checksum.

10.Set the sensor latitude: (factory default 0HZ)

Command for setting sensor latitude:		slave response:	
Sensor address	01H	Sensor address	01H
Function code	06H	Function code	06H
Address	00H	Register	00H

	14H	Address	14H
Sensor latitude	XXH	Sensor latitude	XXH
	XXH		XXH
CRC	CRC LH	CRC	CRC LH

XXXX :UINT16 type,coefficient 0.01

Set sensor latitude command example:								
Host sending	01H	06H	00H	14H	11H	20H	C4H	46H
Slave response	01H	06H	00H	14H	11 H	20H	C4H	46H

Note: 0014H is the register address, this register controls the sensor latitude. In the above example, 1120H is converted to decimal 4384, and then multiplied by a factor of 0.01 to get 43.84°, that is, the sensor latitude is set to 43.84°, and the last two bytes are the CRC checksum.

11.Set the sensor filter length:

Set sensor filter length command:		slave response:	
Sensor address	01H	Sensor address	01H
Function code	06H	Function code	06H
Address	00H	Register Address	00H
	0EH		0EH
Filter length of sensor	00H	Filter length of sensor	00H
	XX		XX
CRC	CRC LH	CRC	CRC LH

XX : 0x0C~0x40

Set sensor filter length command example:								
Host sending	01H	06H	00H	0EH	00H	20H	E9H	D1H
Slave response	01H	06H	00H	0EH	00 H	20H	E9H	D1H

Note: 000EH is Register Address, which controls the filter length of the sensor. In the above example, the sensor filter length is set to 32, and the last two bytes are the CRC checksum.

Note: After setting the filtering length, it needs to be powered on again to take effect.