GKG3 MEMS Digital Vibration sensor

Product Manuel

V2.4-20260706

Technical Highlights

- ❖ RS232/485/TTL signal output optional;
- ❖ Vibration: 10~2000Hz, 10g;
- ❖ Shock: 100g@11ms, triaxial (half-sine wave);
- ❖ High stability and strong environmental performance: shock resistant, vibration resistant, and wide temperature range.

Product Introduction

The GKG3 triaxial Vibration sensor is a widely used multi-axis Vibration sensor series product independently developed by RUICOM Technology, suitable for various engineering scenarios such as vibration detection and shock testing. This series supports digital interface output, with selectable RS232, RS485, or TTL communication methods, and features a configurable address code function. It supports long-distance serial networking of multiple sensors, facilitating multi-point synchronous measurement and centralized data analysis. The built-in FFT processing unit can directly output vibration frequency, velocity, and amplitude parameters, enabling users to perform rapid data analysis.

Users can dynamically adjust the sampling frequency according to the actual frequency of the measured object, thereby improving the accuracy of frequency measurement. The GKG3 adopts single-crystal silicon capacitive sensing technology. Core components include a micromachined silicon chip, a low-power ASIC for signal conditioning, a microprocessor for storing temperature compensation data, and an integrated temperature sensor. This product features low power consumption, factory calibration, robust mechanical structure, and high output stability. The new generation circuit design uses a solid-state power supply reset mechanism and has overvoltage protection. The long-term stability and typical deviation of the scaling factor across the entire range are better than 0.1%. This product series ensures long-term reliable high-precision output thanks to its robust structural design, low power consumption, and excellent deviation stability.

Application Scope

- ❖ Flight data recording and analysis
- ❖ Structural fatigue monitoring and life prediction
- ❖ Bridge structural health monitoring
- ❖ High-speed train operation status monitoring
- ❖ Vehicle vibration testing and monitoring
- ❖ Wind turbine generator vibration monitoring
- ❖ Track vibration and roadbed stability monitoring
- ❖ Monitoring of heavy equipment such as road rollers

Performance Parameters

GKG3	Parameter						Unit
Measurement Range	±2	±4	±8	±10	±20	±40	g
Deflection Calibration	<1	<1	<1	<1	<1	<1	mg
Measurement Axis	X, Y, Z	X, Y, Z	X, Y, Z	X, Y, Z	X, Y, Z	X, Y, Z	axis
Upward/Power-Off Repeatability	<2	<2	<2	<2	<2	<2	mg(Max)
Deflection Temp Coefficient	0.15	0.15	0.15	0.75	0.75	0.75	mg/℃(Typ)
Resolution/Threshold (@ 1Hz)	< 1	< 1	< 1	< 1	< 1	< 1	mg(Max)
Nonlinearity	<1	<1	<1	<1	<1	<1	% FS (Max)
Bandwidth (3dB)	500	500	500	500	500	500	Hz
Cross-Axis Sensitivity	1	1	1	2	2	2	%
Lateral Vibration Sensitivity Ratio	1	1	2	5	5	5	%
Noise Density	21	21	21	86.6	86.6	86.6	μg/√Hz
Resonant Frequency	2.4	2.4	2.4	5.5	5.5	5.5	kHz
Auto Output Rate	5Hz/10Hz/25Hz/50Hz/100Hz/200Hz/500Hz/1000Hz						
Output Interface	RS232/TTL/RS485						
Communication Protocol	Serial communication protocol and MODBUS RTU protocol						
Input (VDD_VSS)	9-36 VDC						
Operating Current Consumption	<60mA @ 12 VDC						
Protection Class	IP67						
Material	Product: Aerospace aluminum Magnetic base: Stainless steel						
Weight	Net weight: ≤116g Magnetic base: ≤50g						
Dimensions	Product dimensions: L36×W32×H24mm Magnetic base dimensions: L36×W32×H8.1mm						
	Note: Do not use beyond the specified range for extended periods.						

Vibration parameter index

The vibration frequency, velocity, and amplitude of this product are derived from data analysis. The frequency is the main frequency of the current object's vibration, the velocity is the vibration speed, and the amplitude is the vibration amplitude value of the object. Due to the irregularity of the object's vibration, the data is for reference only.

Indicators	Parameter	Unit
Acceleration	2,4,8,10,20,40	g
Velocity	Vibration velocity	m/s
Amplitude	Vibration amplitude	m
Frequency	0~500	Hz
Frequency Resolution	4	Hz

Ordering and Selecting

Model	Range		Signal Output	Protocol		Installation method
GKG3	02: ±2g	-	2: RS232	SP: Serial communication protocol	-	T: Standard
	04: ±4g		3: TTL level	MB: MODBUS Protocol		A: Magnetic Adsorption Base
	08: ±8g		4: RS485			
	10: ±10g					
	20: ±20g					
	40: ±40g					

E.g: GKG302-2SP-T: ±2gmeasurement range/RS232S signal output/serial communication protocol/standard installation method.

Spatial coordinate system

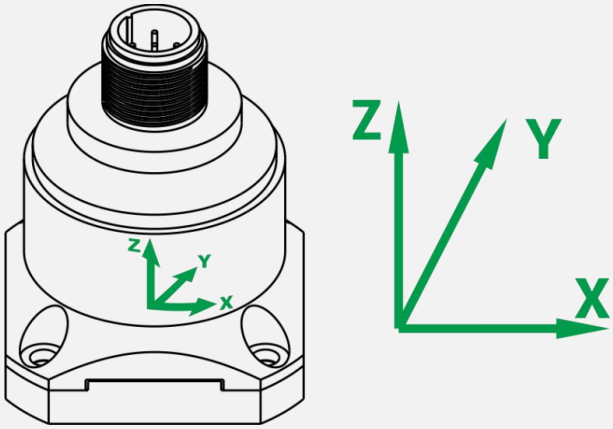

Product Dimensions

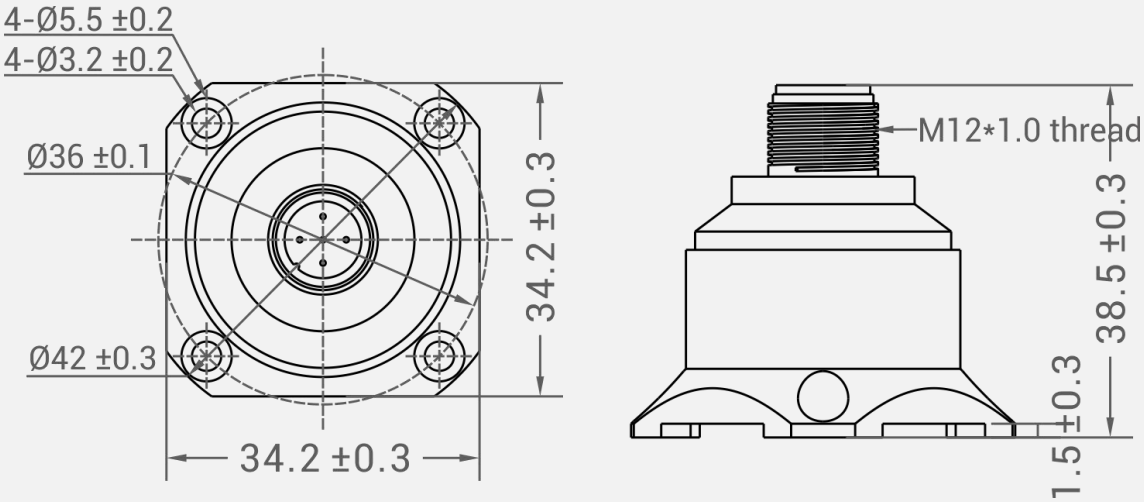

Housing: L34.2×W34.5×H38.5mm

Recommended screws: 4 M3 screws

Installation accessory dimensions

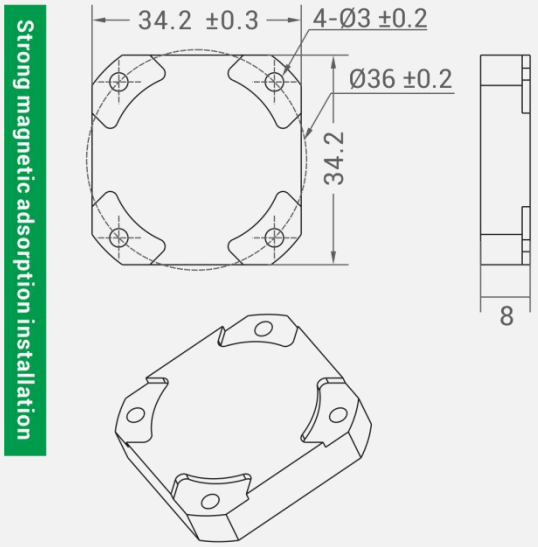

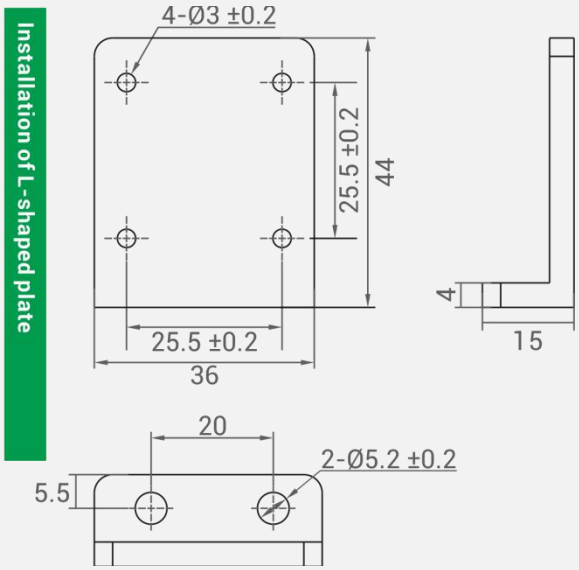

Strong magnetic size: L34.2×W34.2×H8mm

L-shaped size: L44×W36×H15mm

PIN Definition

Stitch/Thread Color	PIN Definition
PIN1/Brown	DC9 ~ 36V
PIN2/White	TTL/RS232_RXD RS485_D+
PIN3/Blue	TTL/RS232_TXD RS485_D-
PIN4/Black	GND
PIN5/--	NC

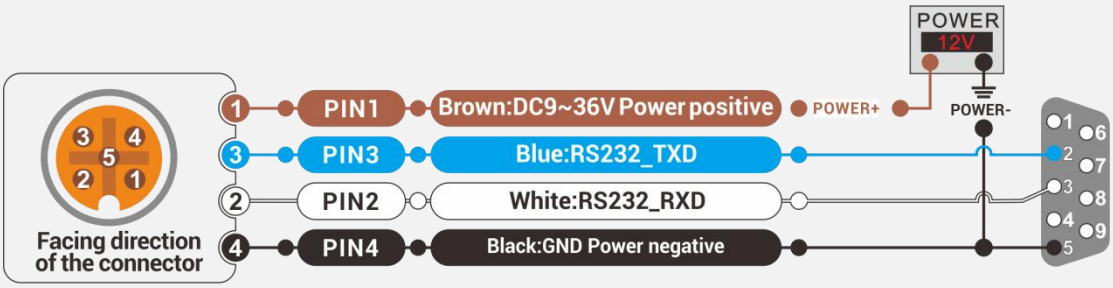

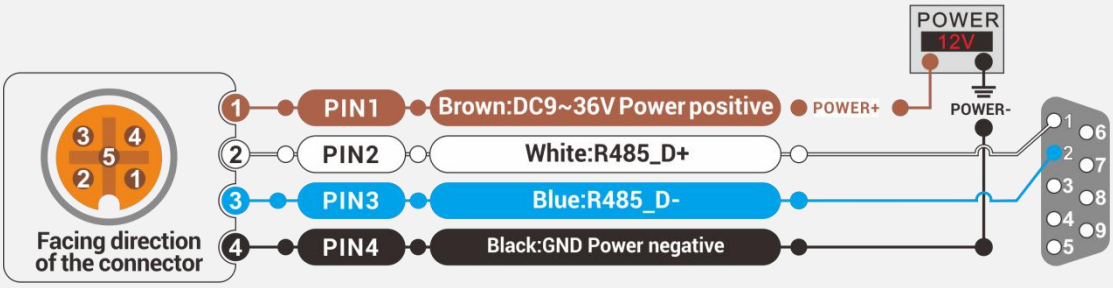

Sensitivity amplitude-frequency response characteristic curve

Reference conditions: f = 20.000 Hz, a = 2.000 g

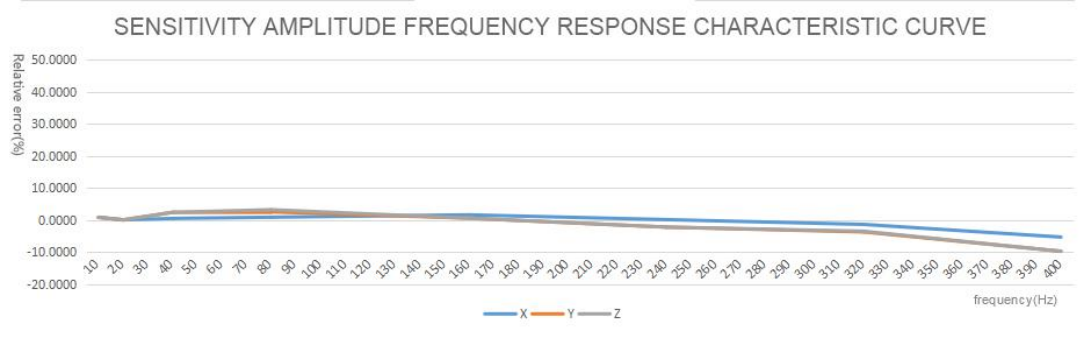

Reference chart for measurement range ±8g

Sensitivity linearity curve

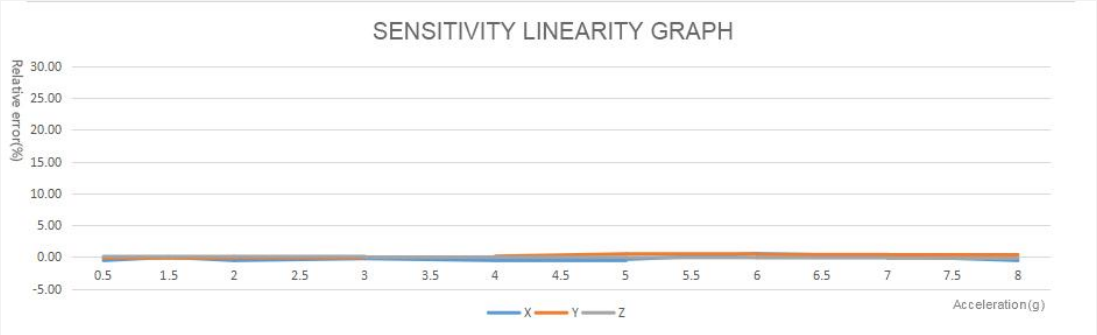

Communication Protocol

The product supports two protocols: serial communication protocol and MODBUS RTU. The default configuration parameters for the protocols are as follows:

Protocol	Serial Communication Protocol	MODBUS-RTU Protocol
Address Code	0	1
Broadcast Address	255	0
Serial Port Baud Rate	9600	9600
Parity Bit	No Parity	Even Parity
Serial Port Start Bit	1 Bit	1 Bit
Serial Port Data Length	8 Bits	8 Bits
Serial Port Stop Bit	1 Bit	1 Bit
Output Mode	Question & Answer	Question & Answer
Data Format	Data Format	Data Format
Data Verification Method	Sum Parity	CRC16

Automatic Output Data Items

This output item is related to the automatic output mode command. The corresponding bit position determines the output; the lower the bit, the earlier the data appears. That is, all

output content is ordered from left to right as:
Acceleration|Frequency|Velocity|Amplitude|Temperature. For E.g:
Serial communication protocol: Automatic output item is 1011H, then the automatic output data is: Acceleration|Frequency|Amplitude;
Modbus protocol: Automatic output item is 9001H, then the automatic output data is: Acceleration|Amplitude|Temperature.

BIT0	BIT1	BIT2	BIT3
Vibration sensor	-	-	-
BIT4	BIT5	BIT6	BIT7
Frequency	-	-	-
BIT8	BIT9	BIT10	BIT11
Velocity	-	-	-
BIT12	BIT13	BIT14	BIT15
Amplitude	-	-	Temperature

The table below describes the relationship between output rate, data content, and baud rate. Please calculate and set the parameters appropriately based on the parameters.

Frequency (HZ)	0	5	10	25	50	100	200	500	1000	300	400
Remark	Automatic output data items are valid						Automatic data output is invalid; only acceleration data is output. It is recommended to use a high baud rate of 115200/230400.				

Serial communication protocol (Factory default protocol)

Note: Please read the following carefully before use:
1) All settings are not saved after power failure. Settings are applied immediately upon sending a command. To save them, a save command must be sent. The procedure is: Send setting command -> Success return, settings take effect -> Send save command -> Success return, settings are saved.
2) Please note that the product's automatic output rate is affected by data length and baud rate. Please calculate and set a reasonable baud rate yourself.
3) The serial communication protocol specifies a broadcast address of 255. This sensor can also receive broadcast address content, but will not reply. Therefore, broadcast address 255 can be used for the following purposes only.
1. Set the address of all Vibration sensor of this model connected to the bus to a specific address.
2. Set all Vibration sensor of this model connected to the bus to a relative/absolute zero point.
3. Test all sensors of this model on the entire bus. The host sends an acceleration query command to the bus at address 0. If the communication indicator light flashes, communication is normal.
4) During normal communication, it flashes once per second.

1. Data Frame Format:

Identifier (1byte)	Data Length (1byte)	Address Code (1byte)	Command Word (1byte)	Data Field	Checksum (1byte)
0x68					

Default communication parameters: Address 0, baud rate 9600, 1 start bit, 8 data bits, no parity, 1 stop bit;

Valid address range: 0~254;

Identifier: Fixed at 0x68;
Data length: Length from data length to checksum (including checksum);
Data field: Varies depending on the content and length of the command word;
Checksum: The sum of data length, address code, command word, and data field, ignoring carry, i.e., Sum & 0xFF.

2. Command word parsing

command word	Meaning/E.g	Description
0X01	**Read X-axis acceleration command** **E.g: *68 04 00 01 05***	Data Field (0 bytes) No Data Field Command
0X02	**Read Y-axis acceleration command** **E.g: *68 04 00 02 06***	Data Field (0 bytes) No Data Field Command
0X03	**Read Z-axis acceleration command** **E.g: *68 04 00 03 07***	Data Field (0 bytes) No Data Field Command
0X04	**Simultaneously read acceleration commands** **E.g: *68 04 00 04 08***	Data Field (0 bytes) No Data Field Command
0X84	Sensor response **E.g: *68 0D 00 84 00 20 10 10 40 00 05 05 00 1B***	Data Field (9 bytes) AA AB BB CC CD DD EE EF FF AA AB BB:3 characters represent the X-axis; CC CD DD:3 characters represent the Y-axis; EE EF FF:3 characters represent the Z-axis; The acceleration format is parsed using the same method as the X/Y/Z axes; In the E.g on the left, the acceleration is: X-axis 02.010g, Y-axis -04.000g, Z-axis +50.500g; **00 20 10** The three red bytes are the X-axis acceleration value, which is compressed BCD code. The high bit of the first byte is **0** for the sign bit (0 for positive, 1 for negative) **02** represents a two-digit integer value, and **010** represents a three-digit decimal value. The data parsing method for other axes is the same; this acceleration is parsed as +02.010g; **10 40 00** The three blue bytes represent the Y-axis angle value, parsed using the same method as the X-axis;

		05 05 00 The three green bytes represent the product's Z-axis acceleration, parsed using the same method as the X-axis acceleration; **1B** Checksum: the hexadecimal sum of all data, excluding the prefix 68.
0X15	**Reading triaxial vibration frequency data** **E.g: *68 04 00 15 19***	Data Field (0 byte) No data field command
0x95	Sensor response **E.g:68 0A 00 95 00 04 00 00 00 02 A5**	Data Field (6 bytes) Signed 16-bit integer, big-endian, coefficient 0.1 For E.g: X-axis: 0004H = 4 * 0.1 = 0.4Hz
0X16	**Reading triaxial vibration velocity data** **E.g: *68 04 00 16 1A***	Data Field (0 byte) No data field command
0x96	Sensor response **E.g:68 10 00 96 00 06 3F 85 00 05 5C F8 00 00 00 00 C9**	Data Field (12 bytes) Signed 32-bit integer, big-endian, coefficient 0.000001 For E.g: X-axis:00063F85H = 409,477*0. 000001 = 0.409,477m/s
0X17	**Reading triaxial vibration amplitude data** **E.g: *68 04 00 17 1B***	Data Field (0 byte) No data field command
0x97	Sensor response **E.g:68 10 00 97 00 02 CF 1A 00 01 CC 67 00 2E 04 32 2A**	Data Field (12 bytes) Signed 32-bit integer, big-endian, coefficient 0.0000001 For E.g: X-axis: 0002CF1A H = 184,090 *0. 0000001 = 0. 0184,090m
0X18	**Read acceleration, vibration frequency, vibration velocity, vibration amplitude, and temperature data.** **E.g: *68 04 00 18 1C***	Data Field (0 byte) No data field command
0X98	Sensor response **E.g: *68 2D 00 98 10 00 83 00 00 17 00 09 04 00 29 00 24 00 29 00 09 3A 8C 00 03 AD A7 00 04 99 6E 00 03 89 F7 00 01 99 3D 00 01 C3 82 0D BC 8C***	Data Field (39 bytes) Blue represents X, Y, Z acceleration data in sequence, unit g. Data parsing is consistent with the 04H command parsing method. Green represents X, Y, Z frequency data in sequence, unit Hz. Data parsing is consistent with the 15H command parsing method. Orange represents X, Y, Z velocity data in sequence, unit m/s. Data parsing is consistent with the 16H command parsing method. Red represents X, Y, Z amplitude data in sequence, unit m. Data parsing is consistent with the 17H command parsing method. Purple represents temperature data, unit ℃, coefficient 0.01. Data parsing is consistent with the 15H command parsing method.

0X0B	**Set the serial port baud rate** **E.g: *68 05 00 0B 03 13***	Data Field (1 byte) Baud Rate: 00 represents 2400 01 represents 4800 **02 represents 9600 (default)** 03 represents 19200 04 represents 38400 05 represents 115200 06 represents 230400
0X8B	Sensor response command **E.g: *68 05 00 8B 00 90***	Data Field (1 byte) The number in the data field represents the sensor's response result. 00 Success FF Failure
0X1A	**Set automatic data output items** **E.g: *68 06 00 1A 91 11 C2***	Data Field (2 bytes) Output item: **Default value: 9111H**
0X9A	**Sensor response command** **E.g: *68 05 00 9A 00 9F***	Data Field (1 byte) The number in the data field represents the sensor's response result. 00 Success FF Failure
0X1A	**Read automatic output data items** **E.g: *68 04 00 1A 1E***	Data Field (0 bytes) No data field command
0X9A	**Sensor response command** E.g: 68 06 00 9A 91 11 42	Data Field (2 bytes) The data field value is: 9111H
0X0C	**Set sensor output mode** Question-and-answer mode: The sensor responds with corresponding data only after the host computer sends an acceleration read command. Automatic output mode: The sensor outputs data automatically after power-on, with the output rate based on the set value. For high-frequency output, please set the baud rate to 115200. **E.g: *68 05 00 0C 00 11***	Data Field (1 byte) **00 Question-and-answer mode (factory default)** 01 5Hz Auto output mode 02 10Hz Auto output mode 03 25Hz Auto output mode 04 50Hz Auto output mode 05 100Hz Auto output mode 06 200Hz Auto output mode 07 500Hz Auto output mode (baud rate uses 115200, 230400) 08 1000Hz Automatic Output Mode (Baud Rate 230400) 09 300Hz Automatic Output Mode 10 400Hz Automatic Output Mode
0X8C	Sensor response command **E.g: *68 05 00 8C 00 91***	Data Field (1 byte) The number in the data field represents the sensor response result: 00 Success FF Failure
0X1B	**Set bandwidth** **E.g: *68 06 00 1B 00 01 12***	Data Field (1 byte) **00 Low-Pass 500Hz (Default)** 01 Low-Pass 500Hz 02 Low-Pass 250Hz 03 Low-Pass 125Hz 04 Low-Pass 64Hz 05 Low-Pass 32Hz
0X0B	Sensor response command **E.g: *68 05 00 8B 00 90***	The number in the data field represents the sensor response result: 00 Success FF Failure
0X0F	**Command to set module address** The default address of the sensor is 00.	Data Field (1 byte) XX Module Address, address range

	1. If multiple sensors are connected to a single bus, such as RS485, each sensor must be assigned a different address to control and respond to acceleration separately. 2. If the address is successfully changed, all subsequent command and response data packets must use the new address code to be effective; otherwise, the sensor will not respond to commands. **E.g:** ***68 05 00 0F 01 15*** Set the address to 01. **E.g:** ***68 05 FF 0F 00 13*** Reset the address to 00 using a general address.	from 00 to EF; Note: All products share a common address:**FF**
0X8F	Sensor response command **E.g:** ***68 05 00 8F 00 94***	Data Field (1 byte) The number in the data field represents the sensor response result: 00 Success FF Failure
0X53	Set save command **68 04 00 53 57**	Data Field (0 byte) No data field command
0XD3	Sensor response **E.g:68 05 00 D3 00 57**	Data Field (0 byte) The number in the data field represents the sensor response result: 00 Success FF Failure

MODBUS Communication Protocol

MODBUS uses RTU mode, with 'big-Endian' indicating the address and data items, and employs CRC16 checksum and standard error codes. It supports reading holding registers (0x03) and writing single registers (0x06).

Note: Please read the following items carefully before use:

1) The MODBUS protocol stipulates that there should be a time interval of >3.5 bytes between two data frames (e.g., at a baud rate of 9600, this time is 3.5 × (1/9600) × 11 = 0.004s). However, to leave sufficient margin, this sensor increases this time to 10ms. Therefore, please leave at least a 10ms time interval between each data frame. Please note that the product's automatic output does not consider the register position table and T3.5 time.

Master sends command -- 10ms idle -- Slave replies command -- 10ms idle -- Master sends command...

2) The MODBUS protocol specifies the content related to broadcast address 0. This sensor can also receive broadcast address content, but it will not respond. Therefore, broadcast address 0 can be used for the following purposes, for reference only.

1. Set the address of all Vibration sensor of this model connected to the bus to a specific address.
2. Set all Vibration sensor of this model connected to the bus to a relative/absolute zero point.
3. Test all sensors of this model on the entire bus. The host sends an acceleration query command to the bus at address 0. If the communication indicator light flashes, communication is normal.

3) To improve system reliability, commands must be sent twice consecutively to be effective. "Sent twice consecutively" means that both transmissions are successful (the slave device responds each time), and the two responses must be consecutive. Refer to the following setup procedure:

Send the setting address command -- wait for the slave device to send a success command -- (no other commands should appear) Send the setting address command again -- wait for the slave device to send a success command -- Modification successful

4) After power-on, the command can only be set once. To set it again, power-on must be performed.

5) During normal communication, the command flashes once per second.

1.Data Frame Format:

Default communication parameters: Address 1, baud rate 9600, 1 start bit, 8 data bits, even parity, 1 stop bit; Valid address range: 1~247; CRC checksum: The range is the checksum of all bytes before the CRC field, using 16-bit CRC checksum.

2.Data types:

Type	Description
short	Signed 16-bit integer
ushort	Unsigned 16-bit integer
int	Signed 32-bit integer
uint	Unsigned 32-bit integer
R	Read-only

3.Register address table:

Register address	Data content	Data types	coefficient	Unit
40001	Automatically Output Data Items	ushort（W/R）	-	-
40002	Temperature	short（R）	0.01	℃
40003	X-axis Acceleration	int（R）	0.001	g
40005	Y-axis Acceleration	int（R）	0.001	g
40007	Z-axis Acceleration	int（R）	0.001	g
40010	X-axis Vibration Frequency	short（R）	0. 1	hz
40011	Y-axis Vibration Frequency	short（R）	0. 1	hz
40012	Z-axis Vibration Frequency	short（R）	0. 1	hz
40013	X-axis Vibration Velocity	int（R）	0.000001	m/s
40015	Y-axis Vibration Velocity	int（R）	0. 000001	m/s
40017	Z-axis Vibration Velocity	int（R）	0. 000001	m/s
40019	X-axis Vibration Amplitude	int（R）	0. 0000001	m

40021	Y-axis Vibration Amplitude	int（R）	0. 0000001	m
40023	Z-axis Vibration Amplitude	int（R）	0. 0000001	m

Data parsing method: Data value = Register data * Coefficient.

4.For E.g:

Read X-axis data, Modbus function code 03H:

Host query command:		Slave response::		
Sensor Address	01H	Sensor Address	01H	
Function Code	03H	Function Code	03H	
Register Address	00H	Register Address	0CH	
	02H	Data word bytes 1-4	00H	X-axis acceleration
Register Length	00H		00H	
	06H		00H	
CRC	6408H		24H	
		Data word bytes 5-8	FFH	Y-axis acceleration
			FFH	
			FFH	
			F0H	
		Data word bytes 9-12	00H	Z-axis acceleration
			00H	
			03H	
			E8H	
		CRC_L	2CH	
		CRC_H	DEH	

Taking the above data frame as an E.g: the acceleration conversion process is as follows:

1）Obtain the current data: X-axis register data is 00000002H, Y-axis register data is FFFFFFF0 H, and Z-axis register data is 000003E8H. Then convert the above data to decimal: X-axis acceleration is 2, Y-axis acceleration is -16, and Z-axis acceleration is 1000.

2) Multiply by the coefficients to obtain the data: X-axis acceleration is 2 * 0.001 = 0.002g, Y-axis acceleration is -16 * 0.001 = -0.016g, and Z-axis acceleration is 1000 * 0.001 = 1g.

5.Set sensor address:

Command to set sensor address code:		Slave Response:	
Sensor Address	01H	Sensor Address	01H
Function Code	06H	Function Code	06H
Address	00H	Register Address	00H
	11H		11H
New Address of Sensor	00H	New Address of Sensor	00H
	04H		04H
CRC	D80C	CRC	D80C

Commands must be sent twice consecutively to be effective.

E.g of using the command to set the sensor address:								
Host sends	01H	06H	00H	11H	00H	04H	D8H	0CH
Slave Response	01H	06H	00H	11H	00H	04H	D8 H	0CH

Note: 0011H is the register address, which controls the sensor address. In the E.g above, the sensor address has been changed to 0004H, and the last two bytes are the CRC checksum.

6. Set the sensor serial port baud rate: (The factory default is 9600bps)

Command to set sensor serial port baud rate:		Slave Response:	
Sensor Address	01H	Sensor Address	01H
Function Code	06H	Function Code	06H
Address	00H	Register Address	00H
	12H		12H
Sensor Baud Rate	00H	Sensor baud rate	00H
	XX		XX
CRC	CRC LH	CRC	CRC LH

XX: A0H:4800 A1H:9600 A2H:19200 A3H:38400 A4H:115200 A5H:230400

E.g of using the command to set the sensor baud rate:								
Host sends	01H	06H	00H	12H	00H	A2H	A8H	76H
Slave Response	01H	06H	00H	12H	00 H	A2H	A8H	76H

Note: 0012H is the register address, which controls the sensor baud rate. In the E.g above, the sensor baud rate is set to 19200, and the last two bytes are the CRC checksum.

7. Set the parity bit of the sensor serial port:(The factory default is even parity)

Command to set sensor serial port parity bit:		Slave Response:	
Sensor Address	01H	Sensor Address	01H
Function Code	06H	Function Code	06H
Register Address	00H	Register address	00H
	09H		09H
Sensor Parity Bit Change	00H	Sensor changes parity bit	00H
	01H		01H
CRC	9808	CRC	9808

E.g of using the command to set the parity bit of the sensor serial port:								
Host sends	01H	06H	00H	09H	00H	01H	98H	08H
Slave Response	01H	06H	00H	09H	00H	01H	98 H	08H

The above E.g sets the byte format to: one start bit + 8 data bits, no parity, + 1 stop bit. This setting takes effect after a power cycle. The factory default is one start bit + 8 data bits, even parity, + 1 stop bit.

Note: 0009 is the register address; this register controls the sensor communication character format.

0000H: One start bit + 8 data bits, even parity, + 1 stop bit

0001H: One start bit + 8 data bits, no parity, + 1 stop bit

8. Set the sensor output mode: (Factory default: 0Hz)

Command to set sensor output mode:		Salve Response:	
Sensor Address	01H	Sensor Address	01H
Function Code	06H	Function Code	06H
Address	00H	Register Address	00H
	13H		13H
Sensor Output Rate	00H	Sensor Output Rate	00H
	XX		XX
CRC	CRC LH	CRC	CRC LH

The table below shows the valid values for data field XX:

Frequency (Hz)	0	5	10	25	50	100	200	500	1000	300	400
XX	00H	01H	02H	03H	04H	05H	06H	07H	08H	09H	0AH

E.g of using the command to set sensor output mode:								
Host sends	01H	06H	00H	13H	00H	A2H	A8H	76H
Slave Response	01H	06H	00H	13H	00H	02H	A8H	76H

Note: 0013H is the register address, which controls the sensor output mode. In the E.g above, the sensor output rate is set to 10Hz, and the last two bytes are the CRC checksum, automatically outputting triaxial acceleration data.

9. Configure automatic data output items for the sensor:

Command to set automatic data output items for the sensor:		Slave Response:	
Sensor Address	01H	Sensor Address	01H
Function Code	06H	Function Code	06H
Address	00H	Register Address	00H
	00H		00H
Automatic Output Items of the Sensor	91H	Automatic Output Items of the Sensor	91H
	11H		11H
CRC	CRC LH	CRC	CRC LH

Commands must be sent twice consecutively to be effective.

E.g of using the command to set up automatic data output items for sensors:								
Host sends	01H	06H	00H	00H	91H	11H	D8H	0CH
Slave Response	01H	06H	00H	11H	00H	04H	D8H	0CH

Note: 0000H is the register address, which controls the sensor's automatic data output. In the E.g above, the sensor's output is set to 9111H, and the last two bytes are the CRC checksum.

10. Read sensor output data items automatically:

Command to read sensor output data items:		Slave Response:	
Sensor Address	01H	Sensor Address	01H
Function Code	03H	Function Code	03H
Register Address	00H	Length	02H
	00H	Register Data	91H
Register Length	00H		11H
	01H		
CRC	CRC LH	CRC	CRC LH

Commands must be sent twice consecutively to be effective.

E.g of using the command to automatically read sensor output data items:								
Host sends	01H	03H	00H	00H	00H	01H	84H	0AH
Slave Response	01H	03H	02H	91H	11H	15H	D8H	

Note: 0000H is the register address, which controls the sensor's automatic data output. In the E.g above, the sensor's output is 9111H, and the last two bytes are the CRC checksum.

11. Setting the sensor bandwidth:

Set sensor bandwidth command:		Slave Response:	
Sensor Address	01H	Sensor Address	01H
Function Code	06H	Function Code	06H
Address	00H	Register Address	00H
	14H		14H
Sensor Bandwidth	00H	Sensor Bandwidth	00H
	XXH		XXH
CRC	CRC LH	CRC	CRC LH

The table below shows the valid values for data field XX.:

Low-pass bandwidth (Hz)	500	500	250	125	64	32
XX	0	1	2	3	4	5

Commands must be sent twice consecutively to be effective.

E.g of using the command to set sensor bandwidth:								
Host sends	01H	06H	00H	14H	00H	01H	08H	04H
Slave Response	01H	06H	00H	14H	00H	01H	08H	04H

Note: 0014H is the register address, which controls the sensor bandwidth. In the E.g above, the sensor bandwidth is set to 500Hz, and the last two bytes are the CRC checksum.