GKC370 MEMS voltage-type Vibration sensor

Product manual

V1.1-20260514

Technical Characteristics

- ❖ Triaxial MEMS Vibration sensor;
- ❖ 0.5-4.5V output;
- ❖ Measurement range ±2g~±16g;
- ❖ Self-test function;
- ❖ IP67 protection rating .

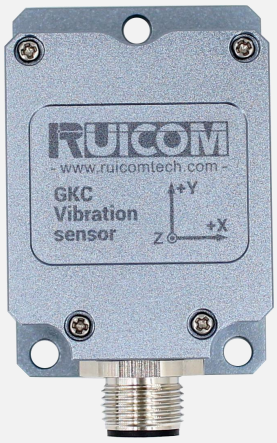

Product Introduction

The GKC370 vibration sensor is based on the principle of single crystal silicon MEMS capacitive sensing, providing analog voltage output signals with an output range of 0.5 V to 4.5 V. Its built-in compensation circuit can effectively reduce the impact of temperature and process deviations on measurement accuracy, thereby achieving good linearity and long-term stability.

This product has the following technical features:

-Integrated electromagnetic compatibility (EMC) and radio frequency interference (RFI) shielding design;

-Low power operation mode;

-Support multi range configuration of ± 2g, ± 4g, ± 8g, ± 16g (optional);

-DC coupling output interface;

-Frequency response range: 0 Hz to 200 Hz;

-Built in self checking function, supporting real-time monitoring of operating status.

Based on the above performance indicators, GKC370 is suitable for industrial vibration measurement, equipment status monitoring, and general motion detection applications.

Application Scope

- ❖ Bridge impact monitoring
- ❖ Structural monitoring
- ❖ Machine control
- ❖ Low-frequency vibration monitoring

Specifications

GKC370	Parameters	
Measurement Range	±2g~±16g	
Measuring Axis	X,Y,Z Axis	
Resolution	<1mg	
Zero-Point Acceleration	2.5V (Voltage Output)	
Full-Range Output	0.5-45V (Voltage Output)	
Linearity	1%	
Power-On/Power-Off Repeatability	<2mg	
Response Frequency	0 - 200Hz Integrated low-pass filter	
Bandwidth	200Hz @ 3Db	
Shock	>100g@11ms (half sine wave)	
Shock Recovery Time	<1 ms	
Operating Temperature Range	-40~+85℃	
Storage Temperature Range	-40~+85℃	
Supply Voltage	9-36V DC	
Maximum Power Consumption	35-38mA @12V DC	
Noise Density	<25μg/√ Hz @ ±2g	<60μg/√ Hz @ ±16g
Maximum Calibration Uncertainty	<1mg	
Electrical Protection	EMC and RFI shielding	
Reliability	MIL-HDBK-217 Level 2	
Self-Test	±1g @ 10Hz ST line grounding	
Protection Class	IP67	
Product Dimensions	L55×W37×H29mm	
Product Weight	≤100g(excluding cable)	

Order selection

Model		Measurement Range		Output Signal
GKC370	-	02: ±2g	-	V2: 0.5-4.5V
		04: ±4g		
		10: ±10g		
		16: ±16g		

E.g: GKC370-02-V2: ±2g Measurement Range, output voltage 0.5~4.5V.

Size

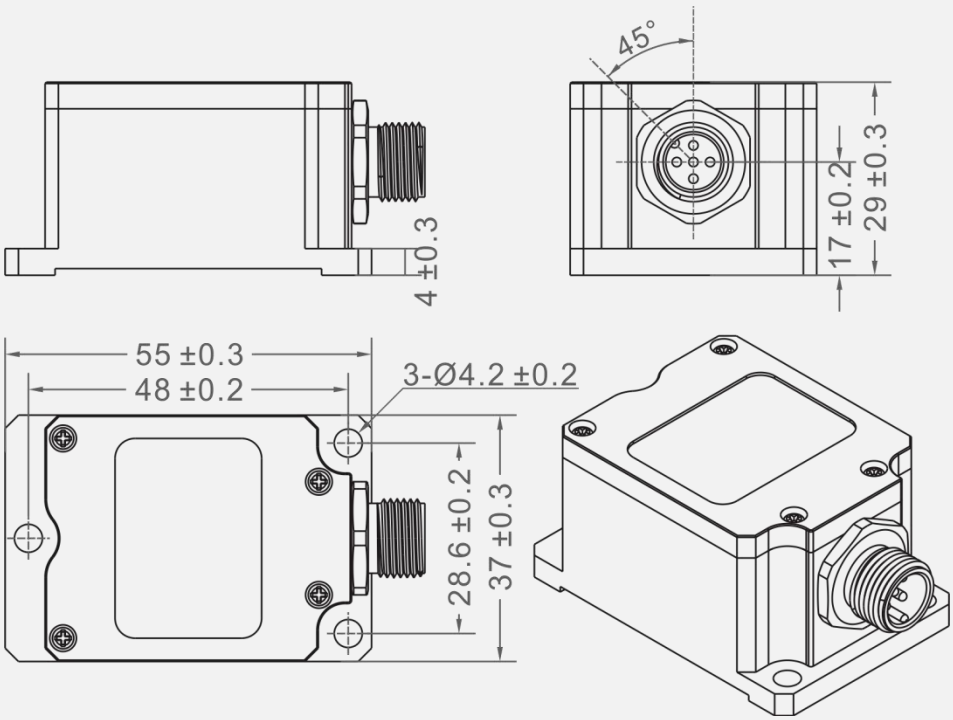

Shell size: L55×W37×H29mm
Installation size: L48×W28.6×H4mm
Mounting screws: 3 M4 screws
Shell material: aluminum alloy

Electrical Parameters

Pin/Thread Color	Definition
PIN1/Brown	DC9 ~ 36V
PIN2/White	X-axis voltage signal
PIN3/Blue	Y-axis voltage signal
PIN4/Black	GND
PIN5/Grey	-axis voltage signal

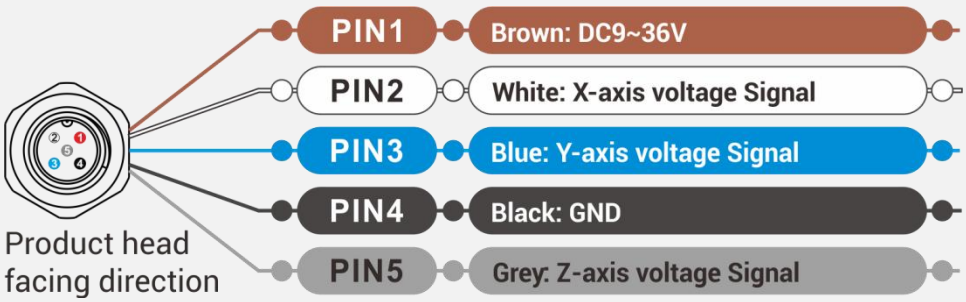

Self-Test Function

1. Self-Test Operation

- Short-circuit the self-test cable (Self-Test) to ground (GND). The sensor enters self-test mode.
- At this time, the X, Y, and Z axis output terminals will generate ±1g and 10Hz square wave signals respectively, used to verify whether the sensor and output circuit are working properly.

2. Self-Test Completion

- After the self-test is complete, the self-test cable must be left floating (disconnected from GND).

3. Precautions for Use

- During normal operation, the self-test cable must be kept floating; otherwise, measurement accuracy will be affected.
- Do not short-circuit the self-test cable to the power supply (Vcc), as this may damage the sensor.

Installation Direction

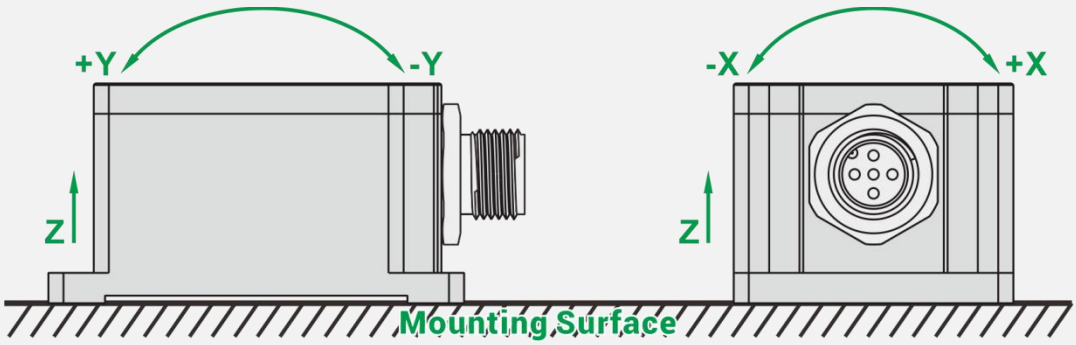

Web: www.ruicomtech.com
E-mail: sales@ruicomtech.com
Tel: 0755-23087719
After-sales technical support:+86 183 0761 1639
Add:Building 1, Lixin Lake Creative Park, 1 Furui Rd, Fuhai St, Bao'an, Shenzhen, China