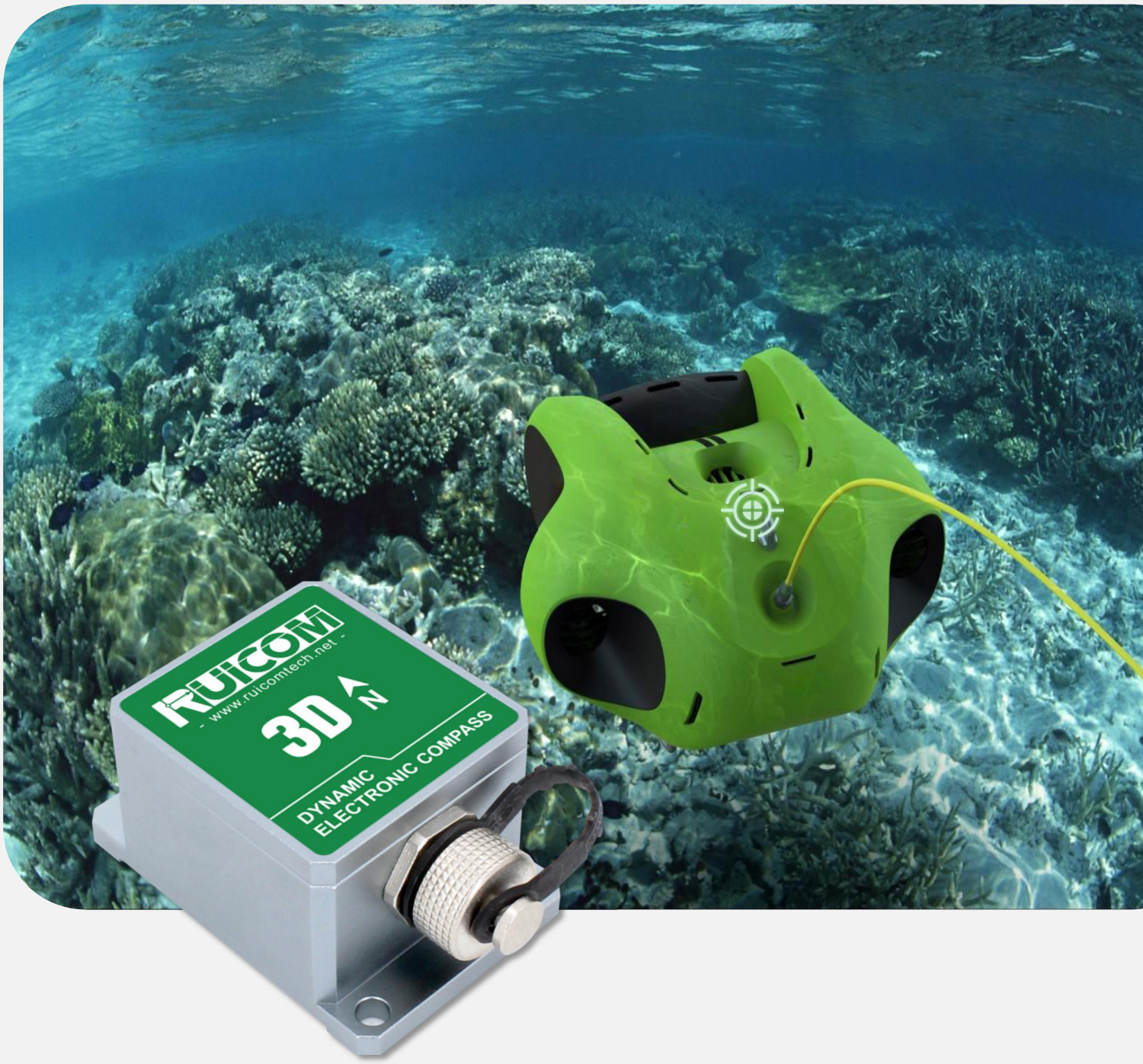

GDM350 / GDM360 Dynamic 3D Electronic Compass

Product Manual

V2.1-20260310

Technical Highlights

- Tilt resolution: 0.1°;
- Static tilt accuracy: 0.2°, dynamic accuracy: 0.5°;
- DC 5V power supply;
- Standard RS232/RS485/TTL output interface;
- With hard magnet, soft magnet and tilt compensation.

Product Introduction

The GDM350 / 360 is a high-performance 3D dynamic electronic compass with a built-in 9-axis inertial measurement unit (IMU), integrating a three-axis accelerometer, a three-axis gyroscope, and a three-axis magnetometer. By combining the high dynamic angle measurement capability of the gyroscope with the high stability attitude detection characteristics of the accelerometer, and using advanced dynamic inertial navigation algorithms, it can calculate pitch and roll angles in real time under complex motion conditions. This product employs hard and soft magnetic intelligent calibration technology, which can effectively suppress environmental magnetic field interference and improve the measurement accuracy of geomagnetic azimuth. The central processing unit calculates heading data in real time and performs full-range magnetic azimuth compensation based on dynamic pitch and roll angles, maintaining reliable heading output even under large tilt angles of ±85°.

The electronic compass is equipped with a high-performance DSP processor and supports standard communication interfaces such as RS232/RS485/TTL. Other communication protocols can also be customized according to requirements. Its compact design combines low power consumption characteristics and is suitable for high-precision measurement and integrated control scenarios such as ship navigation, antenna stability control, and model systems. It performs stably under strong vibration and harsh environmental conditions.

Application Scope

- Marine Navigation and Surveying
- Antenna Servo Control
- Laser Ranging Equipment Collaboration
- ROV Underwater Robot Navigation
- GPS Integrated Navigation System
- Infrared Imager Integration
- Map Completion System Support
- Marine Survey Instrument Support

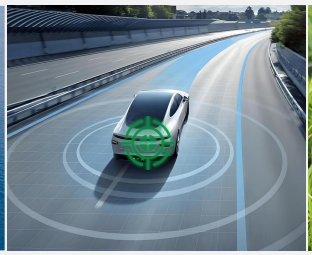

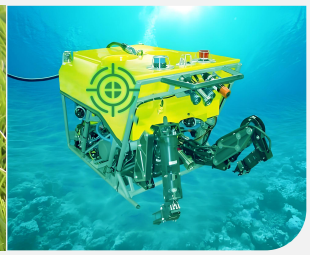

Performance Parameters

GDM350/360		Parameter Indicators
Compass heading parameters	Heading accuracy	0.8°
	Resolution	0.1°
	Pitch measurement range	±90°
	Roll measurement range	±180°
	Tilt accuracy	Static 0.2°
		Dynamic 0.5°
	Resolution	0.1°
	Tilt compensation angle range	Roll ±180°
		Pitch < 85°
Gyroscope	Range	500°/s
Accelerometer	Range	4g
Calibration	Hard iron calibration	Yes
	Soft iron calibration	Yes
	Magnetic field interference calibration method	One full rotation (2D calibration)
Physical characteristics	Dimensions	Shell : L55×W37×H24mm
		PCBA : L33×W27×H9.7mm
	RS232/RS485/TTL interface connector	Aerospace connector
		Board connection cable: 4PIN 30cm terminal wire
Interface characteristics	Startup delay	<50ms
	Output rate	5~100Hz(configurable)
	Baud rate	4800 to 115200baud
	Output format	Binary high-performance protocol
Power supply	Supply voltage	(Default) DC +5V
		(Custom) DC 9~36V
	Current (MAX)	45mA
	Ideal mode	35mA
	Sleep mode	TBD
Environment	Operating range	-40℃~+85℃
	Storage temperature	-40℃~+85℃
	Vibration resistance	2500g
Electromagnetic compatibility	Complies with EN61000 and GBT17626	
MTBF	≥98000 hours / time	
Insulation resistance	≥100 megohms	
Shock resistance	100g@11ms, triaxial (half-sine wave)	
Vibration resistance	10grms / 10~1000Hz	
Weight	PCBA: ≤25g Shell: ≤135g (excluding cable)	

Ordering and Selecting

Model	Housing Package			Signal Output	Output Protocol		Mounting Orientation
GDM3	5: PCBA Board	0	-	232: RS232	9A: 9 axis output protocol	-	H:Horizontal installation
	6: Shell			485: RS485			
				TTL: TTL			
E.g: GDM350-2329A-H: PCBA single board / RS232 output / 9 axis output protocol / horizontal mounting.							

Product Size

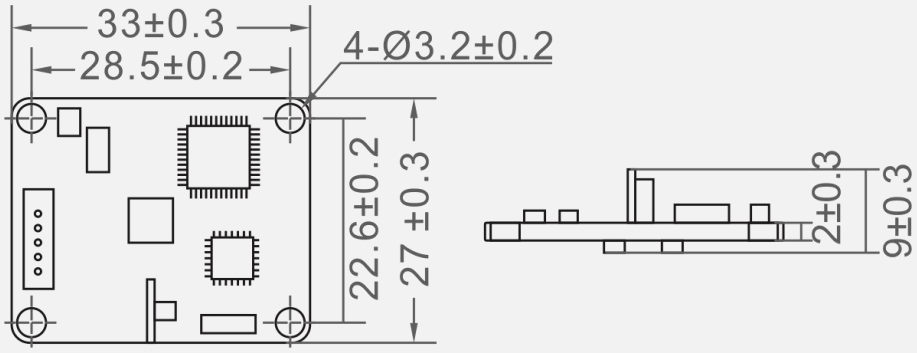

PCBA Size: L33×W27×H9mm
Installation Size: L28.5×W22.6×H2mm
Recommended screws: 4 M3 screws**(copper screws)**

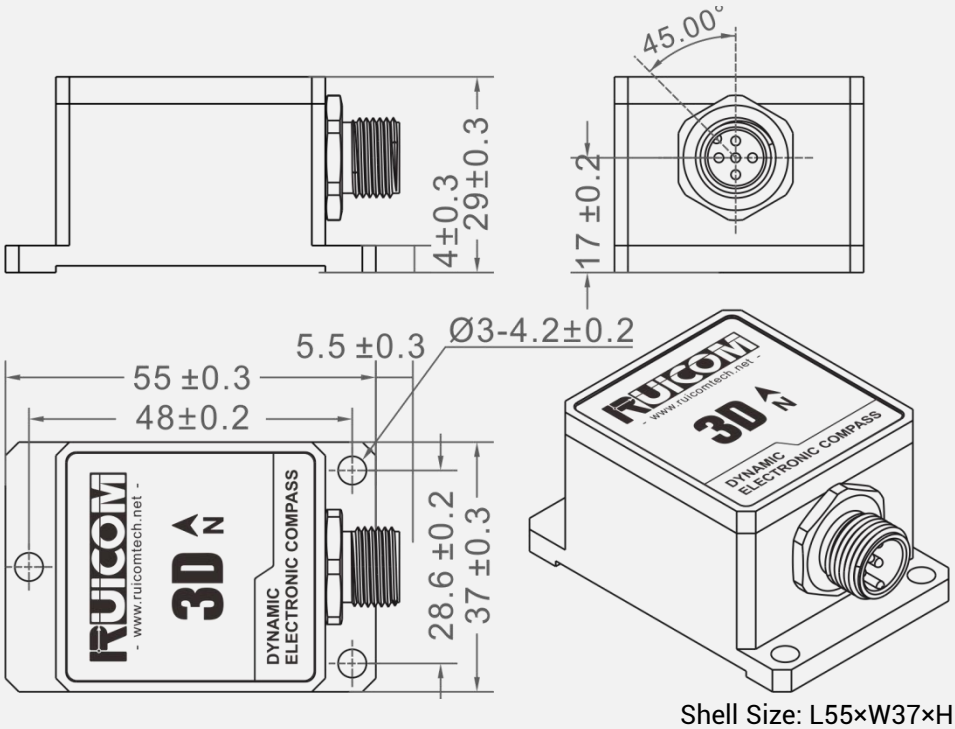

Shell Size: L55×W37×H29mm
Installation Size: L48×W28.6×H4mm
Recommended screws: 3 M4 screws**(copper screws)**

PIN Definition

PIN/Thread Color	Definition	Description
Black	GND	GND
Red	DC 5V	VCC
Yellow	TTL/RS232_RXD/RS485_D-	Receive data
Green	TTL/RS232_RXD/RS485_D+	Transmit data

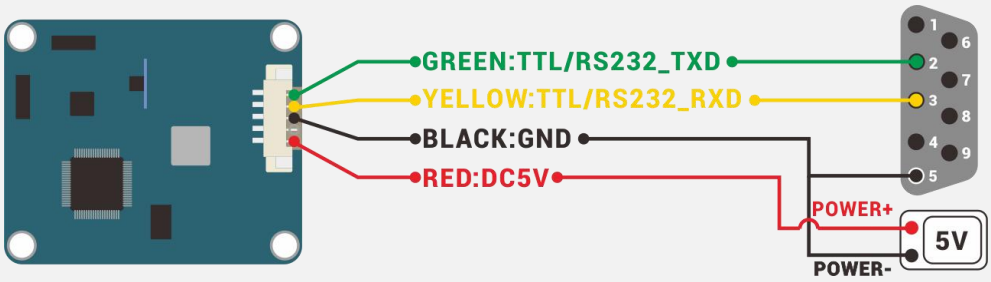

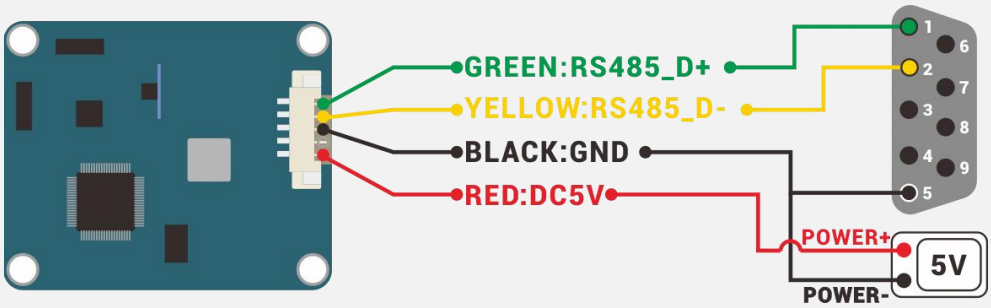

PIN/Thread Color	Definition	Description
PIN1/Red	DC 5V	VCC
PIN2/Yellow	TTL/RS232_RXD/RS485_D+	Receive data
PIN3/Green	TTL/RS232_RXD/RS485_D-	Transmit data
PIN4/Black	GND	GND

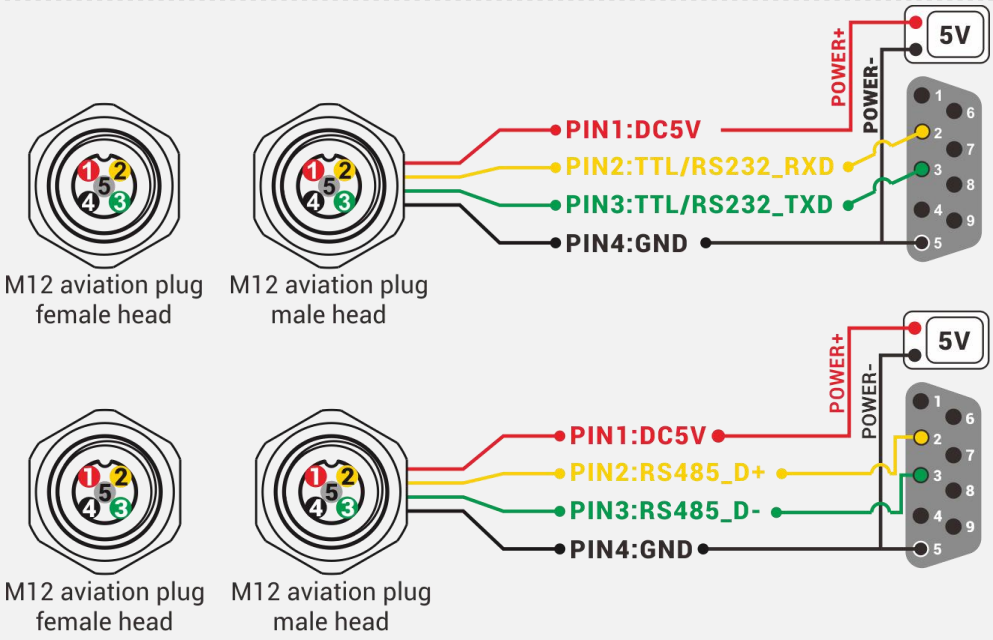

Measurement direction and installation requirements

The azimuth measurement of a 3D electronic compass is based on the principle of geomagnetic induction, and its installation environment must meet strict magnetic interference control requirements. To ensure measurement accuracy, the following installation specifications should be followed:

1. Magnetic Environment Requirements: The installation location should be far away from ferromagnetic materials (such as iron products, permanent magnets, etc.) and electromagnetic equipment (such as motors, transformers, etc.); the minimum distance from potential interference sources should be at least 40cm (the specific distance depends on the magnetic field conditions of the interference source).
2. Installation Material Specifications: Copper screws are recommended for installation; aluminum alloy or other non-magnetic materials are recommended for the mounting bracket.
3. Electromagnetic Interference Precautions: The product can compensate for deviations in stable magnetic field environments, but cannot dynamically compensate for changing magnetic interference. Special attention should be paid to time-varying magnetic field interference generated by DC power supply lines; energy storage devices such as batteries should be considered potential dynamic interference sources.
4. Accuracy Verification Method (Laboratory Standard Test Conditions): Use a vertically mounted, non-magnetic material (aluminum alloy recommended) test rod. The test platform should ensure the rotation axis is perpendicular to the ground; minimize the rotation radius of the test device; environmental magnetic field interference must be controlled within allowable limits (under typical interference-free conditions, measured heading accuracy can reach 0.8°).
5. Engineering Application Guidance (On-site magnetic environment assessment is required for actual installation): When installing in a vehicle, it is recommended to position the compass axis perpendicular to the vehicle's direction of movement; a customized installation plan should be developed for specific application scenarios; the feasibility of installation should be assessed for all possible working conditions.

Note: The measurement accuracy of this product is closely related to the installation environment; on-site calibration and verification are recommended in the final application scenario.

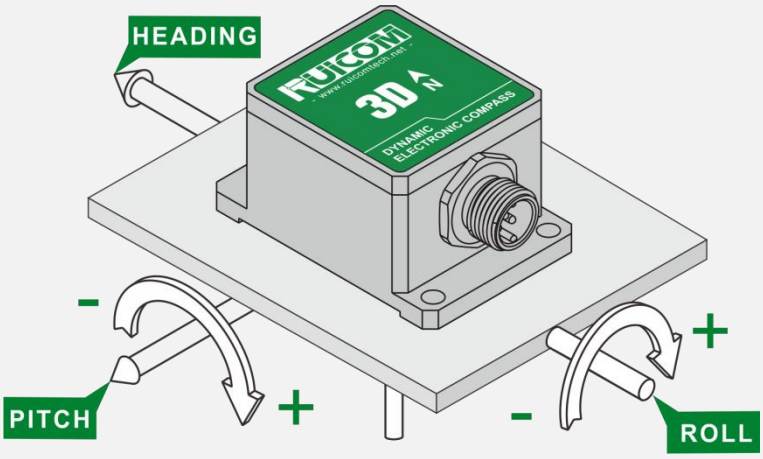

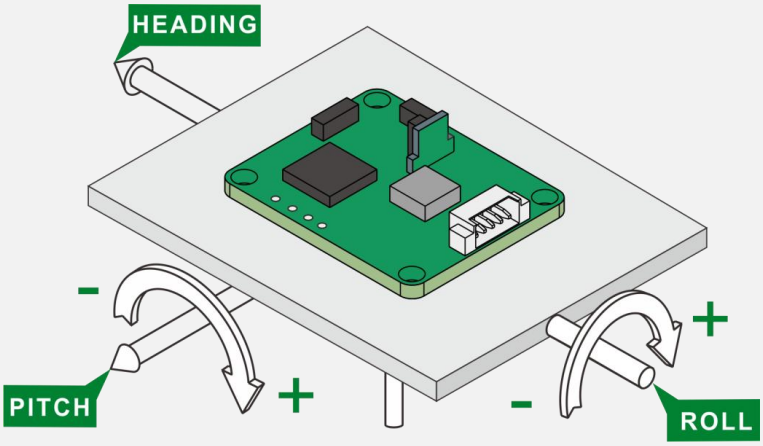

Calibration method

Calibration prerequisites:
1) The compass accuracy does not meet the requirements;
2) If there is a fixed magnetic field interference in the compass installation environment (e.g., installed on ferrous materials), the interference source and the compass must be rotated synchronously for calibration, and their relative positions must be kept fixed during use; otherwise, recalibration is required. If the size or distance of the interference source is not fixed (e.g., a variable iron component), calibration is not possible; a safe installation distance of at least 30cm should be maintained.

1) Place the electronic compass horizontally on a non-magnetic interference platform, correctly connect it to the designated communication interface, and turn on the power.

2) Send the calibration start command in hexadecimal format: 68 04 00 08 0C; or click the "CALI-START" button through the 3D debugging software; the device will return a response confirming entry into calibration mode.

3) Rotate the device 360° uniformly along the horizontal plane at a constant angular velocity (≥40 seconds/revolution) to ensure complete acquisition of spatial magnetic field distribution data. Return to the initial 0° position to terminate the calibration.

4) Send the calibration stop command in hexadecimal format: 68 04 00 0A 0E; or click the "CALI-SAVE" button through the 3D debugging software; the system will store the calibration parameters and return a success status.

Installation Notes:
For fixed installation on equipment with magnetic interference, the electronic compass and the host device must be kept relatively fixed to complete the rotation calibration process together. This operation can effectively compensate for the inherent magnetic field interference of the equipment, ensuring that the accuracy of the orientation measurement meets the technical specifications.

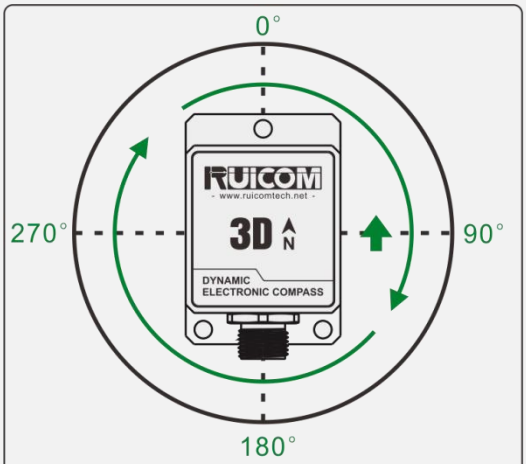

Separate calibration simulation diagram
The starting point can be at any point in 360 °, rotate in place for more than 1 circle and less than 2 circles, and try to rotate at a uniform speed, not too fast!

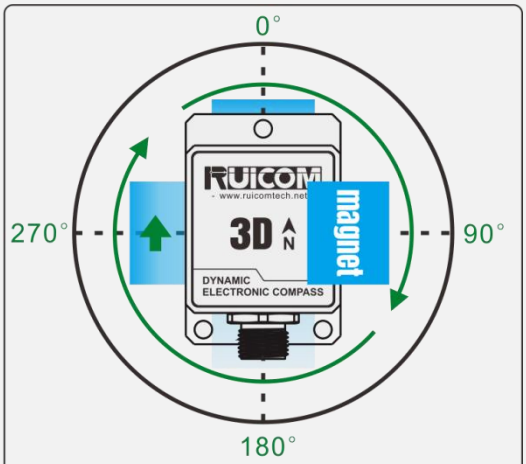

Calibrate the simulation diagram together with the fixed interference source
The starting point can be at any point in 360 °, rotate in place for more than 1 circle and less than 2 circles, and try to rotate at a uniform speed, not too fast!

Communication Protocol

1.Data frame format: (8 data bits, 1 stop bit, no parity, default rate 9600)

Identifier (1byte)	Data Length (1byte)	Address Code (1byte)	Command Word (1byte)	Data Field	Checksum (1byte)
68h					

Identifier: Fixed at 68H;
Data Length: Length from the data length to the checksum (including the checksum);
Address Code: Address of the acquisition module, default is 00;
Data Field varies according to the content and length of the command word;
Checksum: The sum of the data length, address code, command word, and data field, without considering carry.

2.Command Word Parsing

Description	Meaning/Example	Description
0X04	Simultaneously read Roll/Pitch/Heading angle commands **68 04 00 04 08**	Data Field (0 bytes) No Data Field Command
0X84	Sensor Response E.g: **68 0D 00 84 00 10 50 10 10 05 01 04 01 1C**	Data Field (9 bytes) AA AB BB CC CD DD EE EF FF AA AB BB: 3 red characters represent the Pitch axis; CC CD DD: 3 blue characters represent the Roll axis; EE EF FF: 3 green characters represent the Heading angle; AA AA BB is the angle value returned by the Pitch, in compressed BCD code. 00 10 50 Red The three red bytes are the angle value returned by the Pitch, in compressed BCD code. The high-order bit of the first byte is 0, which is the sign bit (0 for positive, 1 for negative). 01 0 is a three-digit integer value, and 50 is a two-digit decimal value. The parsing method for other axis data is the same; the pitch angle is parsed as +10.50°; 10 10 05 Blue The three blue bytes represent the Roll return value, parsed using the same method as Pitch, with the angle being -010.05°; 01 04 01 Green The three green bytes represent the Heading return value, parsed using the same method as Pitch, with the angle being +104.01°.
0X06	Set Magnetic Declination Command **68 06 00 06 02 08 16**	Data Field (2 bytes) SA AB SS: Sign 0 (positive), 1 (negative) AA: Two-digit integer B: One-digit decimal Example: 02 08 = +20.8°
0X86	Sensor Response E.g: **68 05 00 86 00 8B**	Data Field (1 byte) The number in the data field represents the sensor's response result. 00 Successful setting FF Failed setting
0X07	Read Magnetic Declination Command **68 04 00 07 0b**	Data Field (0 bytes) No data field command
0X87	Sensor Response E.g: **68 06 00 87 02 08 97**	Data Field (2 bytes) The number in the data field represents the sensor's response result.

0X08	Start Calibration Command **68 04 00 08 0C**	Data Field (0 bytes) No data field command.
0X88	Sensor Response E.g: **68 05 00 88 00 8D**	Data Field (1 byte) The number in the data field represents the sensor's response result. 00 Successful setting FF Failed setting
0X0A	Save Calibration Command **68 04 00 0A 0E**	Data Field (0 bytes) No data field command.
0X8A	Sensor Response Command E.g: **68 05 00 8A 00 8F**	Data Field (1 byte) The number in the data field represents the sensor's response result. 00 Successful setting FF Failed setting
0X0B	Set Communication Baud Rate Command **68 05 00 0B 02 12**	Data Field (1 byte) 01 represents 4800 **02 represents 9600 (factory default)** 03 represents 19200 04 represents 38400 05 represents 115200
0X8B	Sensor Response Command E.g: **68 05 00 8B 00 90**	Data Field (1 byte) The number in the data field represents the sensor's response result. 00 Successful setting FF Failed setting
0X0F	Set Module Address Command **68 05 00 0F 01 15**	Data Field (1 byte) XX Module Address, the address ranges from 00 to EF. Note: Our company's unified address is FF. If you forget the address you set during operation, you can use the FF address to operate the product, and it will still respond normally.
0X8F	Sensor Response Command Example: **68 05 00 8F 00 94**	Data Field (1 byte) The number in the data field represents the sensor's response result. 00 Successful setting FF Failed setting
0X0C	Set Angle Output Mode **68 05 00 0C 00 11**	Data Field (1 byte) **00: Question-and-answer mode (factory default)** 01: Automatic output mode 5Hz 02: Automatic output mode 15Hz 03: Automatic output mode 25Hz 04: Automatic output mode 35Hz 05: Automatic output mode 50Hz 06: Automatic output mode 100Hz Note: If the interface is RS485, when the output frequency is greater than 50Hz, the baud rate should be increased to 19200 or higher first.
0X8C	Sensor Response Command E.g: **68 05 00 8C 00 91**	Data Field (1 byte) The number in the data field represents the sensor's response. 00 Successful setup FF Failed setup

9-axis data format description:

SOF	First item	Second item	Third item	Fourth item
0x68	Length	Address	Load	Checksum

Protocol Item Descriptions:
SOF: Start of Frame (SOF), a fixed value of 0x68;
Length: Total number of bytes for all items except SOF;
Address: Address (0x00~0xFF);
Load: Consists of commands or command content;
Checksum: The sum of the first to third items, single byte, excluding the high-order byte.

9-axis data type output

Attitude angle + 3-axis acceleration + 3-axis gyroscope speed;

SOF		0x68			
Length		0x25			
Address		0x00			
Payload Contents					
Byte Offset	No. Format	name	content	bytes	
0	INT8U	command	0x84	1	
1	INT8U	ROLL	Roll angle	3	**10 50 23:** 3 characters represent **-50.23°**
4	INT8U	PITCH	Pitch angle	3	**00 60 00:** 3 characters represent **+60.00°**
7	INT8U	YAW	Yaw angle*	3	**01 60 00:** 3 characters represent **+160.00°**
10	INT8U	ACC X	X-axis acceleration	3	**00 10 00:** 3 characters represent acceleration **+1.000g**
13	INT8U	ACC Y	Y-axis acceleration	3	**10 12 05:** 3 characters represent acceleration **-1.205g**
16	INT8U	ACC Z	Z-axis acceleration	3	**00 05 25:** 3 characters represent acceleration **+0.525g**
19	INT8U	Gyro-x	X-axis gyroscope	3	**10 50 23:** 3 characters represent **-50.23°/S**
22	INT8U	Gyro-y	Y-axis gyroscope	3	**01 50 00:** 3 characters represent **+150.00°/S**
25	INT8U	Gyro-z	Z-axis gyroscope	3	**10 90 00:** 3 characters represent **-90.00°/S**
28	INT8U	PENDING		3	3 bytes undefined
31	INT8U	PENDING		3	3 bytes undefined
34	INT8U	Checksum	Checksum	1	

*The heading angle is the magnetic north heading angle, ranging from 0 to 360°.