GNS120 RTK Dual-Antenna Combined Inertial Navigation System

Product Manual

V1.1-20260731

Technical Highlights

- Horizontal azimuth and attitude angle output;
- Integrated navigation position/velocity output;
- Three-axis angular velocity/acceleration output;
- RS232 signal output;
- Compact and lightweight design;
- Long lifespan and high stability.

Product Introduction

The GNS120 integrated inertial navigation system, developed by RUICOM Technology, is based on a MEMS inertial measurement platform and integrates RTK dual-antenna positioning technology. By fusing angular rate information from the gyroscope and acceleration measurement data from the accelerometer, the system performs dynamic attitude calculations and can output the attitude angle, azimuth angle, velocity, position, and three-axis angular velocity and three-axis acceleration of the measured object in real time. The product incorporates RUICOM Technology's independently developed GNSS/inertial integrated navigation algorithm, employing a Kalman filter model to provide real-time feedback and compensation for system errors and IMU instrument errors, suppressing error accumulation and mitigating the effects of short-term gyroscope drift. This product is primarily suitable for applications such as mobile satellite antenna equipment, vehicle guidance systems, and attitude and azimuth control of unmanned aerial vehicles (Model Flights).

Application Scope

- Satcom-On-The-Move
- Satcom-On-The-Pause
- Industrial Intelligent Robot Control
- Unmanned Vehicles (AGV/AMR) in Industrial Parks
- Flight Control Systems (Model Flights/General Aviation Aircraft)

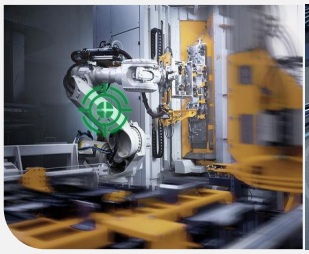
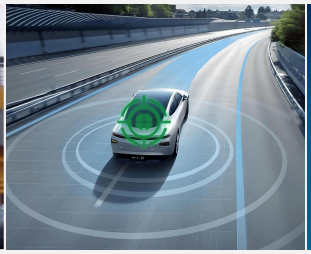
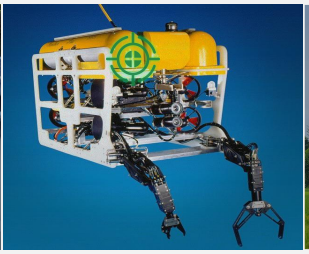

Performance Parameters

GN1220(The navigation system defaults to:GPS+BDS)		Parameter
GNSS index	Single-point positioning accuracy (RMS)[1]	Plane: 1.5m Elevation: 2.5m
	RTK positioning accuracy (RMS)[1 2]	Plane: 0.8cm + 1ppm Elevation: 1.5cm + 1ppm
	Dual-antenna orientation accuracy(RMS)	0.1°/1m baseline
	PPS accuracy(RMS)	20 ns
	Velocity accuracy(RMS)	0.03m/s
	Update rate	5Hz
	GNSS initialization time	<30s
Inertial navigation index	Gyroscope range	±300°/s
	Gyroscope bias instability (Allan)	±300°/s
	Gyroscope random walk (Allan)	8.0 deg/h
	Accelerometer range	0.1 deg/√hr
	Accelerometer bias instability (Allan)	±8g
	Update rate	0.05mg
	Accelerometer random walk (Allan)	200hz

Integrated navigation system performance	Position accuracy	Roll accuracy	Pitch accuracy	Heading accuracy	Velocity accuracy
Position accuracy	(1σ)	(1σ)	(1σ)	(1σ)	(1σ)
Navigation lockout 0s	0.8cm	0.1°	0.1°	0.1°	0.03m/ S
Navigation lockout 60s	2.0‰	0.15°	0.15°	0.15°	0.1m/ S
Power supply voltage	9-36VDC				
Operating current	250mA~300mA@12VDC				
Interface	2×RS232/2×GNSS Antenna Interface				
Dimensions	132×60×35mm				
Weight	≤270g				

1.The test results may deviate due to the influence of atmospheric conditions, baseline length, GNSS antenna type, multipath, number of visible satellites, and satellite geometry.
2. Measurements are conducted using a 1-kilometer baseline and a receiver with good antenna performance, disregarding potential antenna phase center offset errors.
Note: After power-on, it will start up after being idle for 5 seconds.

Ordering and Selecting

Model		Signal Output		Antenna Type
GNS120	-	232: RS232 Signal Output	-	A: HX-CSX644A antenna (main recommendation)
				B: HX-608 antenna (small antenna)

E.g: GNS220-232-A: RS232 signal output / HX-CSX644A antenna (main recommendation).

Product Information

Model Name	Qty	Weight	Connectors + Wiring	Thread length	Thread weight	Remarks
GNS120	1	≤270g	GX12-7P Connector	1m	≤60g	Standard configuration
HX-CSX644A antenna (main recommendation)	2	≤400g	TNC Male to SMA Male	3m	≤110g	Optional configuration
HX-608 antenna	2	≤40g	SMA Pin + Base SMA-J	3m	≤60g	Optional configuration

Spatial coordinate system

This product uses the Front-Right-Down (FRD) coordinate system, and the Euler angle range is as follows:
Rotation around the Z-axis: Yaw range: 0°~360°;
Rotation around the X-axis: Roll range: -180°~180°;
Rotation around the Y-axis: Pitch range: -90°~90°.

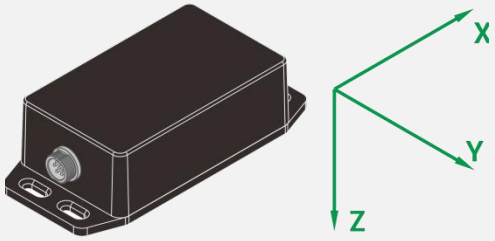

Interface Definition

Pin/Thread Color	Definition	Description
PIN1/Red	VIN9~36V	Power supply positive terminal
PIN2/Black	GND	Power supply negative terminal
PIN3/White	RS232_RXD	RS232 receive signal
PIN4/Green	RS232_TXD	RS232 transmit signal
PIN5/Blue	RTK RS232_TX	RTK RS232 transmit signal
PIN6/Yellow	RTK RS232_RX	RTK RS232 receive signal
PIN7/Orange	PPS	PPS communication

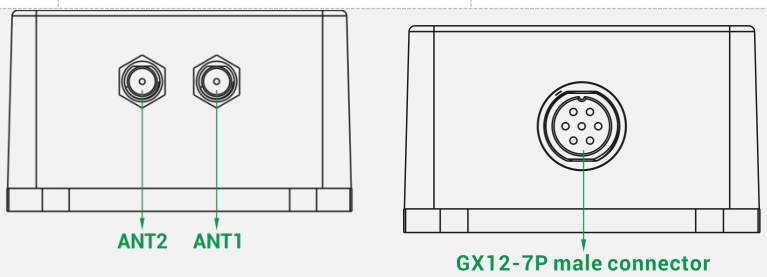

Indicator light description

Indicator Light	Color	Description
Power indicator light	Green	The light illuminates when the power supply is normal.
PVT indicator light	Green	The light illuminates when the module is positioned.
RTK indicator light	Green	The light illuminates when the module's RTK fixation is complete.
ERR indicator light	Red	The light illuminates when the module fails its self-test.

System Functional Block Diagram

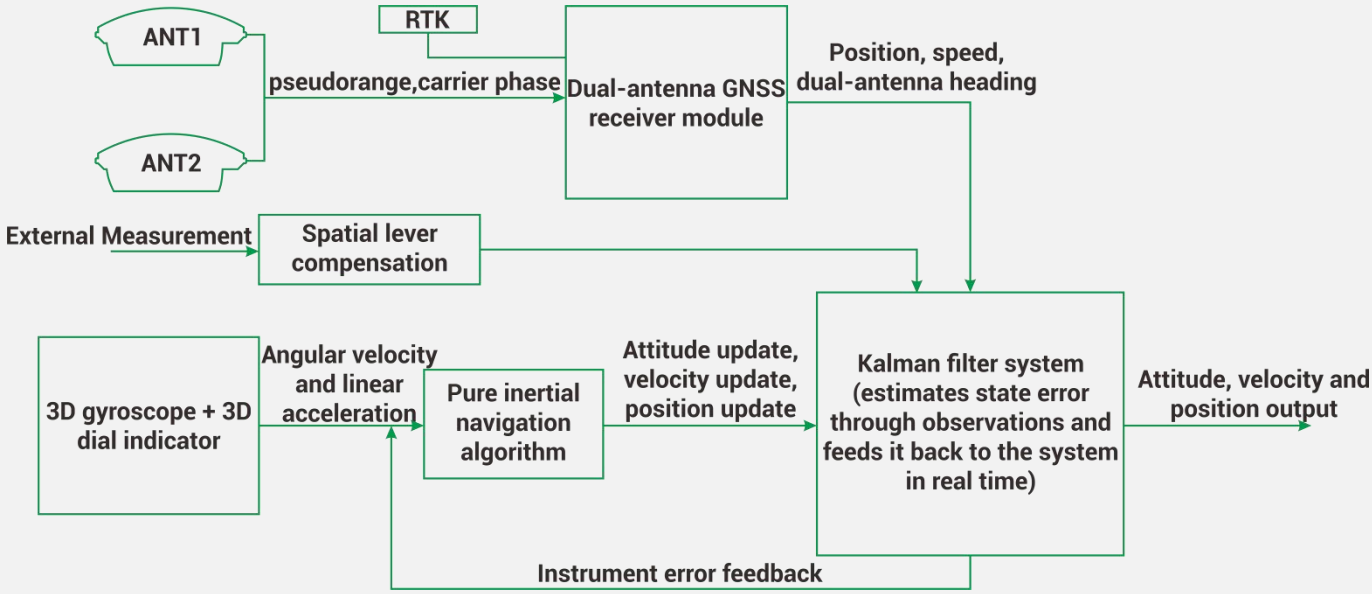

Product Dimensions

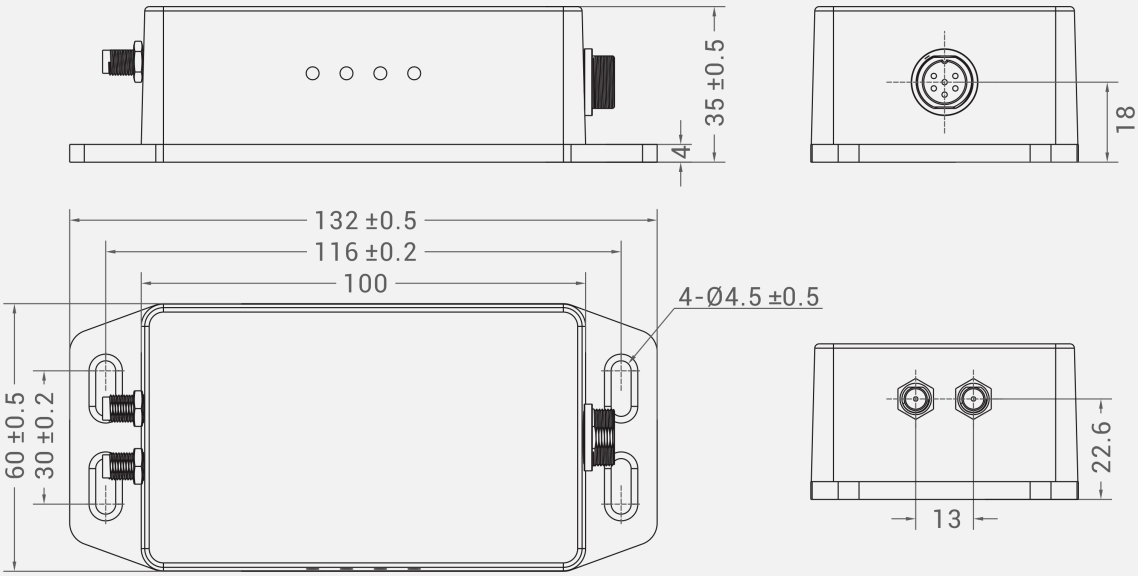

Housing dimensions: 132×60×35mm
Mounting dimensions: 116×30×4mm
Recommended screws: 4 M4.5 screws

Antenna size

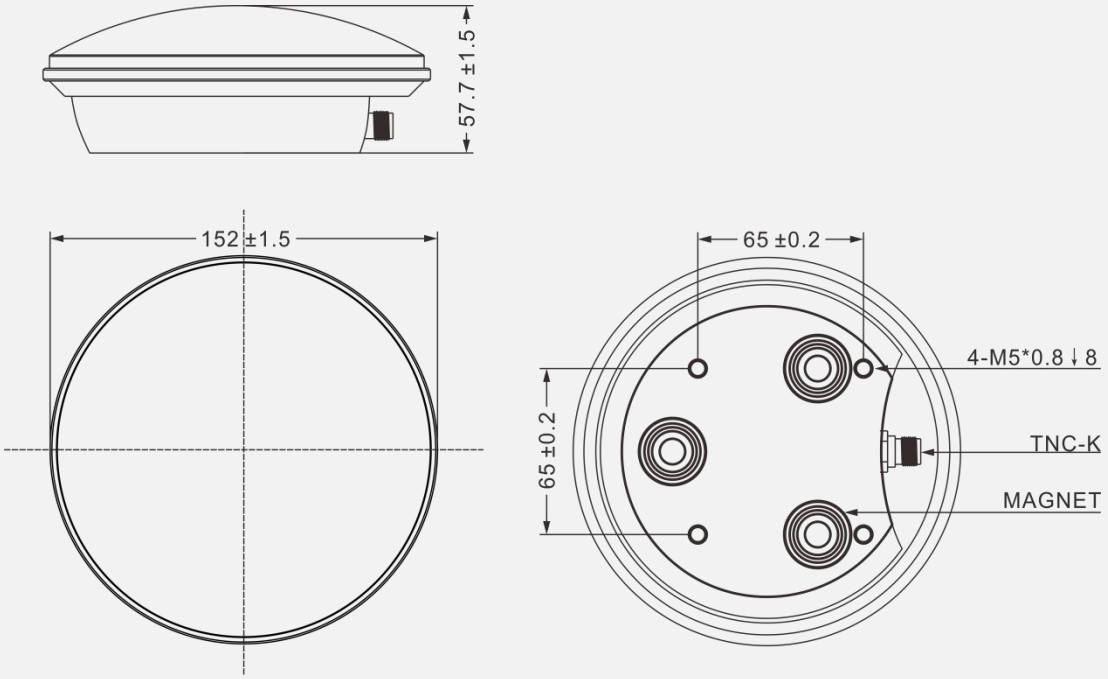

Antenna Model: HX-CSX644A
External Dimensions: Ø152×57.7mm
Mounting Method: Strong Magnetic Adhesion

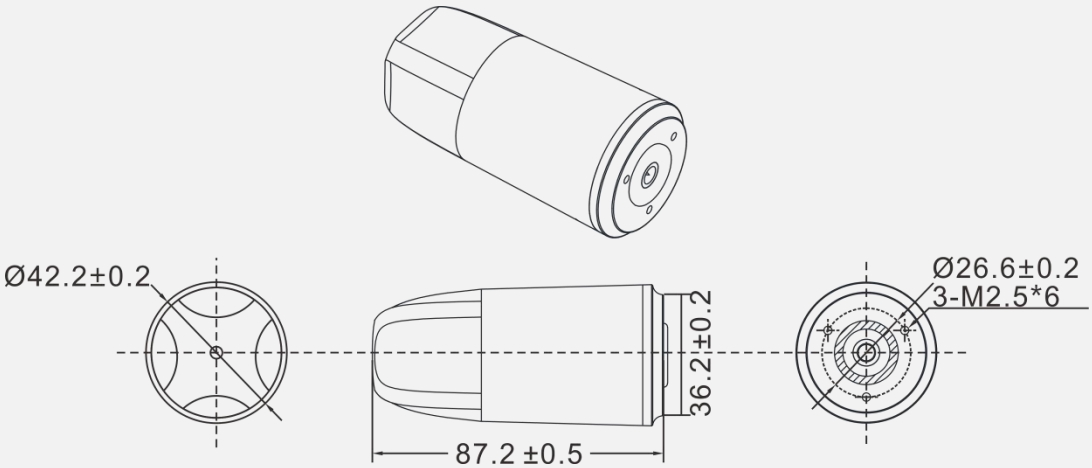

Antenna Model: HX-608
External Dimensions: Ø42.2×87.2mm
Mounting Method: 3 M2.5 screws

Installation Method

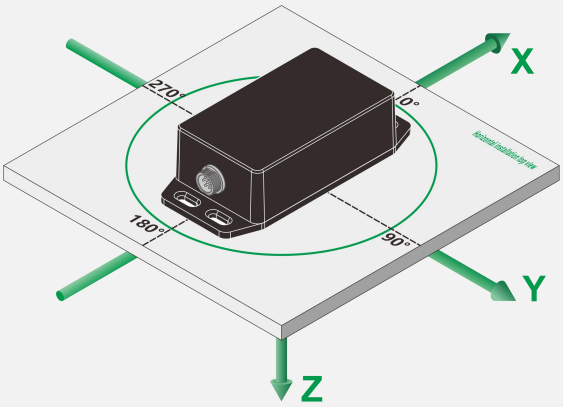

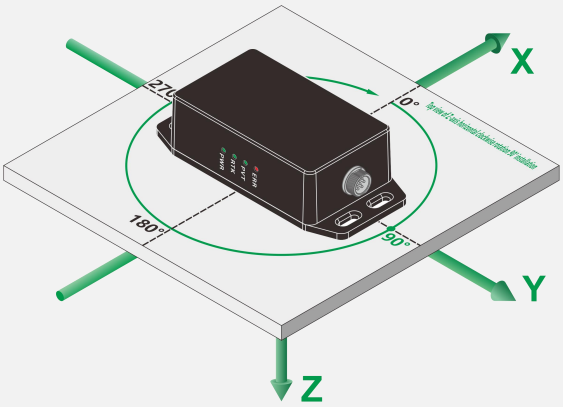

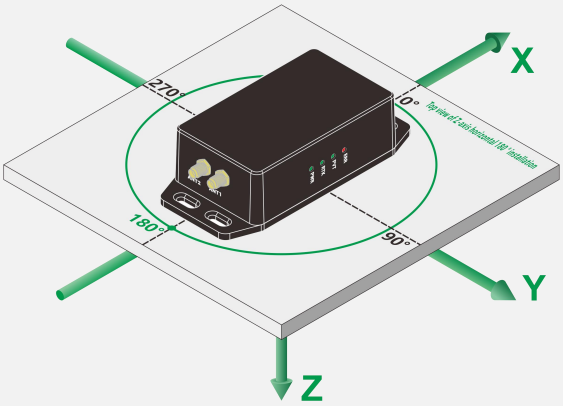

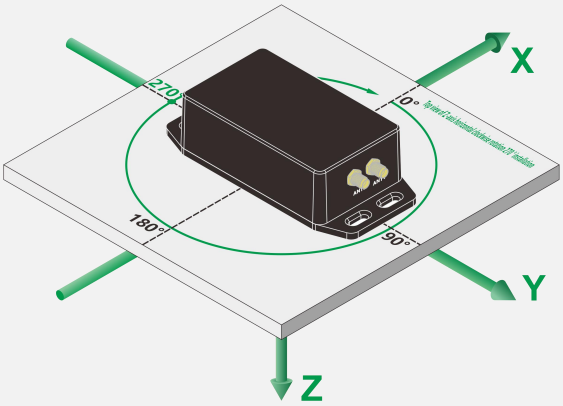

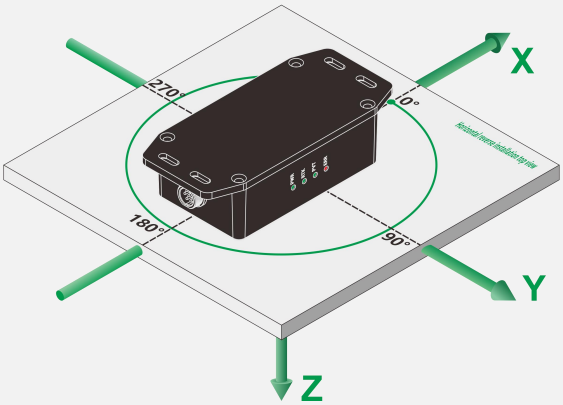

Lever Parameter Configuration Instructions

GNSS Antenna Mold Arm Parameter Configuration Instructions
The system needs to be adapted to the corresponding kinematic model based on the actual installation platform; this configuration will affect the core algorithm parameters for navigation calculation. Accurate compensation is required for the geometric offset between the antenna phase center and the IMU measurement center.

Basic configuration requirements
1. Measurement Accuracy: Millimeter-level measurement accuracy is required (configured values are in meters).
2. Installation Recommendations: Prioritize minimizing horizontal offset; a horizontal distance of <0.5m between the IMU and the main antenna is recommended.
3. Configuration Timing: Configuration must be completed during the static base alignment phase; modifications are prohibited while the base is in motion.

Dual-antenna system configuration specifications
Parameter definition
● Coordinate System: Front-Right-Lower (X/Y/Z) Carrier Coordinate System
● Vector Direction: Geometric vector pointing from the IMU measurement center as the origin to the main antenna phase center
● Sign Rules:
X-axis (Forward): Positive value when the antenna is in front of the IMU

Y-axis (Right): Positive value when the antenna is to the right of the IMU

Z-axis (Ground): Negative value when the antenna is above the IMU mounting reference plane

Typical example
Installation scenario:
- When the main antenna is located above and to the left rear of the IMU:
  Lever_X (negative forward component), Lever_Y (negative rightward component), Lever_Z (negative groundward component).

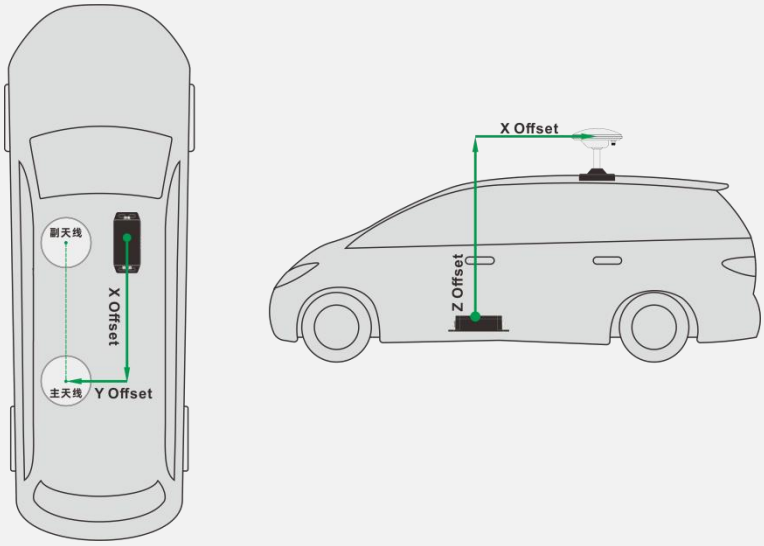

Engineering recommendations
It is recommended to use 3D measurement equipment such as laser trackers to calibrate spatial vector relationships, focusing on controlling:
1. Measurement accuracy of X/Y components in the horizontal plane;

2. Vertical measurement error of antenna phase center height;
3. Spatial geometric consistency of the multi-antenna system;
4. Installation distance between main and auxiliary antennas should be more than 1 meter.

GNSS Dual Antenna Installation Yaw Compensation Angle Configuration Instructions:

The heading angle of a GNSS dual-antenna system refers to geographic north, which is the angle between geographic north and the vector direction from the center point of the main antenna installation location to the center point of the secondary antenna installation location. North-northeast is positive, and north-northwest is negative. When there is a deviation in the heading angle between the axial direction of the dual antennas (the direction from the main antenna to the secondary antenna) and the actual positive X-axis direction of the IMU, yaw compensation angle must be applied, as shown in the following diagram: When the yaw compensation angle θ is in the north-northwest direction of the IMU's positive

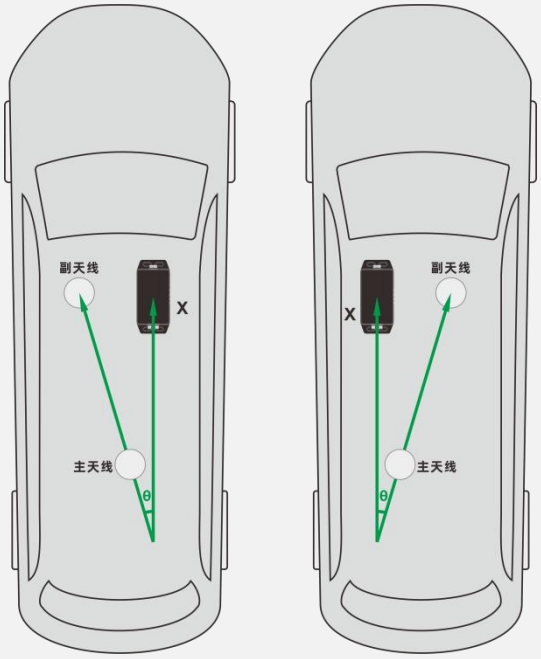

X-axis, the sign of θ is negative; when the yaw compensation angle θ is in the north-northeast direction of the IMU's positive X-axis, the sign of θ is positive. The magnitude of the yaw compensation angle θ can be measured using a protractor or other auxiliary measuring tools.

GNSS Navigation System Configuration Instructions:

The GNS120 supports four major global positioning systems: BDS (BeiDou), GPS (USA), GLONASS (Russia), and GALILEO (EU). It defaults to BDS+GPS dual navigation system, and users can select and configure the navigation system according to the corresponding region.

Power-on initialization process description:

First, install the IMU and dual antennas according to the platform's reference coordinate system. During installation, the IMU's X-axis should point in the forward direction, and pay attention to the installation direction of the dual antennas (the heading angle is the vector direction from the center point of the main antenna's installation position to the center point of the secondary antenna's installation position). The size of the heading angle is the angle between the vector direction and geographic north. Set the boom vector length and the dual antenna yaw compensation angle. Keep the IMU stationary. After powering on the IMU, it will first perform initial alignment, which takes 2-3 seconds. The IMU will initialize and assign values to the roll and pitch angles. After the assignment is complete, the alignment ends. Subsequently, the IMU will enter a state of alternating between pure inertial navigation and GNSS integrated navigation. During this process, the heading angle will be initialized. Note that the GNSS navigation information update frequency is 5Hz. When valid navigation information is received, the IMU will perform a Kalman filter algorithm. Please refer to the output protocol for details.

Communication Protocol

1. Serial communication protocol

● CRC checksum is calculated starting from the frame header, excluding the CRC checksum itself. The calculation method and routines for the CRC checksum of all bytes in the frame are provided in the appendix.

● Frame length is the total number of data bytes excluding the frame header, frame ID, frame length, and checksum.

● Little-endian mode: the least significant byte is sent first.

1.1 Serial port interface parameters

Default transfer rate	115200bps
Start bit	1 bit
Data bit	8 bits
Stop bit	1 bit
Parity check	No

1.2 Data packet format

The IMU integrated navigation output data packet structure is as follows:

Inertial navigation data output format 1:

Offset	Data Type	Name	Description
0	uint8	Frame Header 1	0xAA 0x55
1	uint8	Frame Header 2	
2	uint16	ID Low Bit	0x66
3		ID High Bit	0x01
4	uint16	Data Length	Data Length=0x0033
6	Uint32	GPS Week Seconds (mS)	
10	Uint16	GPS Week Count	
12	Int32	Latitude(resolution 1×e-7/bit)	
16	Int32	Longitude(resolution 1×e-7/bit)	
20	Int32	Altitude(mm)	
24	Int16	Northward Velocity(m/S, resolution 0.01)	
26	Int16	Eastward velocity(m/S, resolution 0.01)	
28	Int16	Ground velocity(m/S, resolution 0.01)	
30	Int16	Roll angle(degrees, resolution 0.01)	±180°
32	Int16	Pitch angle(degrees, resolution 0.01)	±90°
34	Int16	Heading angle(degrees, resolution 0.01)	0~360°
36	Int16	Vibration Sensor X-axis(g, resolution 0.001)	
38	Int16	Vibration Sensor Y-axis(g, resolution 0.001)	
40	Int16	Vibration Sensor Z-axis(g, resolution 0.001)	
42	Int16	Gyroscope X-axis(degrees/second, resolution 0.01)	
44	Int16	Gyroscope Y-axis(degrees/second, resolution 0.01)	
46	Int16	Gyroscope Z-axis(degrees/second,	

		resolution 0.01)	
48	Int16	Dual antenna heading angle(degrees, resolution 0.01)	±180°
50	Uint8	Dual antenna heading angle solution type	
51	Uint8	Temperature value(-80)	Subtract 80 to get the actual temperature value
52	Uint8	Number of navigation satellites	
53	Uint8	GNSS positioning status	0 = Positioning unavailable or invalid 1 = Single-point positioning 2 = Differential positioning 3 = GPS PPS mode 4 = RTK fixed solution 5 = RTK floating solution 6 = Inertial navigation mode 7 = Manual input mode 8 = Simulator mode
54	Uint8	Attitude valid bits	Bit 0: 1 indicates attitude is valid, roll and pitch are valid, and the heading angle has been assigned; 0 is invalid. Bit 7-1: Integrated navigation counter (0-127).
55	Uint8	IMU status word	Bit 0: 1 indicates GNSS data is valid, 0 is invalid; Bit 1: 1 indicates PPS signal is valid, 0 is invalid; Bit 2: 1 indicates initialization is valid, roll and pitch are valid, and the heading angle has been assigned; 0 is invalid; Bit 4-3: 11 indicates GNSS board initialization was successful; Bit 7-5: Reserved as 0.
56	Uint8	IMU operating status	Indicating IMU operating status: 1: Alignment 2: Gyroscope zero-point calibration 7: Pure inertial navigation mode 9: Integrated navigation with GNSS
57	Uint32	CRC_CEHCK(Low byte of 32-bit data)	CRC check
58		CRC_CEHCK(Low byte of 32-bit data)	
59		CRC_CEHCK(High byte of 32-bit data)	
60		CRC_CEHCK(High byte of 32-bit data)	

Note 1: Data is transmitted in little-endian format, with the least significant byte first and the most significant byte last.
Note 2: The initial value of CRC32 is 1. CRC calculation does not include all data in the current frame. See the end of the document for the lookup table calculation method.
Note 3: The integrated navigation count reflects the number of times the IMU's operating state has switched from 7 (pure inertial navigation state) to 9 (integrated navigation with GNSS state), which is the number of times integrated navigation has been performed. If the count does not update, it indicates that integrated navigation has not been performed.

Inertial navigation data output format 2:

Relative position	Type	Content	Description
0	Uint8	Frame Header 1: 0xAA	
1	Uint8	Frame Header 2: 0x55	
2	Uint16	Frame ID: 0x0156	
4	Uint16	Frame Length: 0x002C	
6	Uint32	GPS Cycle Seconds (ms)	
10	Float	Roll Angle (degrees)	±180°
14	Float	Pitch Angle (degrees)	±90°
18	Float	Tail Angle (degrees)	0-360°
22	Float*3	Triaxial Angular Velocity (deg/s, front right bottom)	
34	Float*3	Triaxial Acceleration (g, front right bottom)	
46	Uint8	GNSS Positioning Status	0 = Positioning unavailable or invalid 1 = Single-point positioning 2 = Differential positioning 3 = GPS PPS mode 4 = RTK fixed solution 5 = RTK floating solution 6 = Inertial navigation mode 7 = Manual input mode 8 = Simulator mode
47	Uint8	Attitude Valid Bits	Bit 0: 1 indicates attitude is valid, roll and pitch are valid, and the yaw angle has been assigned; 0 is invalid. Bit 7-1: Integrated navigation counter (0-127)
48	uint8	IMU Status Bits	Bit 0: 1 indicates GNSS data is valid, 0 is invalid. Bit 1: 1 indicates PPS signal is valid, 0 is invalid. Bit 2: 1 indicates initialization is valid, roll and pitch are valid, and the yaw angle has been assigned; 0 is invalid. Bit 4-3: 11 indicates successful GNSS board initialization. Bit 7-5: 0 is reserved.
49	Uint8	IMU Operating Status	Indicates IMU operating status: 1: Alignment 2: Gyroscope zero-point calibration 7: Pure inertial navigation state 9: Integrated navigation with GNSS
50	Uint32	CRC Check	

Note 1: Data is transmitted in little-endian format, with the least significant byte first and the most significant byte last.
Note 2: The initial value of CRC32 is 1. CRC calculation does not include all data in the current frame. See the end of the document for the lookup table calculation method.
Note 3: The integrated navigation count reflects the number of times the IMU's operating state has switched from 7 (pure inertial navigation state) to 9 (integrated navigation with GNSS), i.e., the number of times integrated navigation has been performed. If the count does not update, it indicates that integrated navigation has not been performed.

1.3 Setting parameters: Command mode SET

Set parameter data format

	Frame header	Frame header	ID	length	payload	Frame end
Data Type	uint8	uint8	uint16	uint16	Data1 See the table below	uint32
Coding	0x55	0xAA	0x0006	0x0005		CRC32

Set the parameter response output data format

	Frame header	Frame header	ID	length	payload	Frame end
Data Type	uint8	uint8	uint16	uint16	Data2 See the table below	uint32
Coding	0xAA	0x55	0x8006	0x0006		CRC32

Setting parameters Data1(5byte):

offset	Name	Data Type	Description
0	Index	Uint8	Parameter indices for setting or reading: 00: Indicates software version and operating platform information; (Read-only) 01: Indicates inertial navigation output data format; 02: Indicates inertial navigation output data frequency; 03: Indicates serial port baud rate; 04: Indicates installation method; 05: Indicates software reset; 06: Indicates EEPROM save (Write only); 07: Indicates X-axis boom length (m) 08: Indicates Y-axis boom length (m) 09: Indicates Z-axis boom length (m) 0A: Dual-antenna yaw compensation angle (degrees) 0B: GNSS navigation system settings, currently supporting BDS, GPS, GLO, and GAL global positioning systems. 0C:Gravity acceleration level setting, **default is 9.7910564 m/s²** FF:Indicates setting status. Setting status 1 indicates valid settings; 0 indicates invalid input parameters (reset to 0 upon power-up).
1	value	Uint32/float	Index corresponds to the set value.

Detailed description of parameter Data1 (5 bytes):

index	Type	value	Remarks
01	Uint32	01 00 00 00	01 00 00 00: Indicates data format 1; 02 00 00 00: Indicates data format 2.
02	Uint32	0A 00 00 00	Sets the data stream output frequency in Hz. Common values are: 5 / 10 / 20 / 25 / 50 / 100 / 200. Note: The output frequency setting should be considered in conjunction with the serial port baud rate and the length of the data output format bytes. Changing the output frequency does not save the settings after power failure; an EEPROM save command must be executed.
03	Uint32	00 C2 01 00	Sets the serial port output baud rate. Valid values are: 9600 / 19200 / 38400 / 115200 / 230400 / 256000 / 460800; **Default value is 115200bps.** A restart is required for the baud rate settings to take effect. Power-off setting procedure: Set the baud rate, save the parameters to EEPROM, and execute a software reset.
04	Uint32	00 00 00 00	Set the inertial navigation system (INS) installation

			direction. The value range is 0-4: 00: Horizontal installation (default direction); 01: Z-axis horizontal rotation 90 degrees clockwise; 02: Z-axis horizontal rotation 180 degrees clockwise; 03: Z-axis horizontal rotation 270 degrees clockwise; 04: Horizontal reverse installation; A restart is required for the settings to take effect. Power-off setup procedure: Set the installation method, save the parameters to EEPROM, and perform a software reset.
05	Uint32	FF FF FF FF	Software Reset
06	Uint32	FF FF FF FF	The settings are saved to EEPROM and will be effective upon the next power-on.
07	float	00 00 80 3F	Set X-arm length to 1.0M
08	float	00 00 80 3F	Set Y-arm length to 1.0M
09	float	00 00 80 3F	Set Z-arm length to 1.0M
0A	float	00 00 B4 42	Set dual-antenna yaw compensation angle to +90 degrees
0B	Uint32	03 00 00 00	GNSS Navigation System Settings: Bit 0: 1 indicates BDS is valid, 0 indicates BDS is invalid; Bit 1: 1 indicates GPS is valid, 0 indicates GPS is invalid; Bit 2: 1 indicates GLO is valid, 0 indicates GLO is invalid; Bit 3: 1 indicates GAL is valid, 0 indicates GAL is invalid; 0x0000003: Indicates setting the GNSS navigation system to BDS+GPS.
0C	float	2B A8 1C 41	Set the gravity acceleration level to 9.7910564 m/s²
FF	Uint32	01 00 00 00	This indicates the setting status. The setting is only effective when the setting status is 1; when it is 0, the input setting parameter is invalid.

Note: All Uint32 or float storage modes are little-endian.

Set parameter response Data2 (6 bytes):

offset	Name	Data Type	Description
0	Index	Uint8	Parameter indices for setting or reading: 01: Output data format; 02: Output data frequency; 03: Serial port baud rate; 04: Installation method; 05: Software reset; 06: EEPROM save (write operation only); 07: X-axis boom length (m); 08: Y-axis boom length (m); 09: Z-axis boom length (m); 0A: Dual-antenna yaw compensation angle (degrees); 0B: GNSS navigation system setting; 0C: Gravity acceleration level; FF: Setting status.
1	value	Uint32	The index corresponds to the set value
5	ack	Uint8	0x00: Setting OK; 0xFF: Setting failed.

Note: Before setting the command, write 1 to index 0xFF to enable the setting. After a successful response to the setting command, the output frequency and data format will change immediately, but the baud rate must be saved before powering on again. Additionally, settings must be saved after each device update; otherwise, there is no power-off save function.

Routine:
Set the output frequency to 5Hz.:
Host sends:55 AA 06 00 05 00 FF 01 00 00 00 7A C2 E7 25
IMU Reply:AA 55 06 80 06 00 FF 01 00 00 00 00 83 9A 0D 74 Enable settings.
Then Host sends:55 AA 06 00 05 00 02 05 00 00 00 C1 C1 21 1A
IMU reply:AA 55 06 80 06 00 02 05 00 00 00 00 84 36 81 28 Set the output frequency to 5Hz, and it will take effect immediately.
Save settings:55 AA 06 00 05 00 06 FF FF FF FF D0 B7 C4 06
IMU reply:AA 55 06 80 06 00 06 FF FF FF FF 00 00 F3 2D 42 Save settings, frequency will be 5Hz after the next power cycle.
Set Baud Rate to 9600bps:
Host sends:55 AA 06 00 05 00 FF 01 00 00 00 7A C2 E7 25
IMU reply:AA 55 06 80 06 00 FF 01 00 00 00 00 83 9A 0D 74 Enable settings.
Then Host sends:55 AA 06 00 05 00 03 80 25 00 00 73 2A 40 C3
IMU reply:AA 55 06 80 06 00 03 80 25 00 00 00 CF 85 37 0D Set Baud Rate to 9600bps.
Save settings:55 AA 06 00 05 00 06 FF FF FF FF D0 B7 C4 06
IMU reply:AA 55 06 80 06 00 06 FF FF FF FF 00 00 F3 2D 42 Save settings.
Software reset and restart:55 AA 06 00 05 00 05 FF FF FF FF 00 CD 64 41
IMU reply: AA 55 06 80 06 00 05 FF FF FF FF 00 AE 81 B9 C4 IMU Then reset and restart.

1.4 Parameter reading GET command

Note: The parameter read command reads the parameter configuration stored in the internal EEPROM. If the parameter is set but the save command is not executed, the parameter is read from the EEPROM.

Serial port input command format

	Frame header	Frame header	ID	length	payload	Frame end
Data type	uint8	uint8	uint16	uint16	index	uint32
Encoding	0x55	0xAA	0x0007	0x0001		crc32

Serial port response command format

	Frame header	Frame header	ID	length	payload	Frame End
Data type	uint8	uint8	uint16	uint16	Data3	uint32
Encoding	0x55	0xAA	0x8007	0x0005		crc32

Parameter index description:

offset	Name	Data Type	Description
0	Index	Uint8	Parameter index for setting or reading: 00: Indicates system information such as software/hardware version; (read operation only) 01: Indicates output data format; 02: Indicates output data frequency; 03: Indicates serial port baud rate; 04: Indicates installation method; 05: Indicates software reset; (write operation only) 06: Indicates EEPROM storage (write operation only); 07: Indicates X-axis boom length (m) 08: Indicates Y-axis boom length (m) 09: Indicates Z-axis boom length (m) 0A: Dual-antenna yaw compensation angle (degrees) 0B: Indicates GNSS navigation system settings 0C: Indicates gravity acceleration level FF: Indicates setting status

Detailed explanation of parameter Data3 (5 bytes):

index	Type	value	Notes
00	Uint32	02 01 03 02	Software Version: V01.02 Hardware Version: V02.03
01	Uint32	01 00 00 00	01 00 00 00: Indicates data format 1: 02 00 00 00: Indicates data format 2:
02	Uint32	0A 00 00 00	Sets the data stream output frequency, unit Hz. Common values for value are: 5, 10, 20, 25, 50, 100, 200. Note: The output frequency setting should be considered in conjunction with the serial port baud rate and the length of the data output format bytes.
03	Uint32	00 C2 01 00	Sets the serial port output baud rate, unit bps. Valid values for value are:9600, 19200, 38400, 115200, 230400, 256000, 460800. A restart is required for the baud rate parameters to take effect. Setting procedure without power interruption: Set the baud rate, save the parameters to EEPROM, and perform a software reset.
04	Uint32	00 00 00 00	Set the inertial navigation coordinate system orientation. The value range is 0-4, with the following correspondences: 00: Horizontal installation (default direction); 01: Z-axis rotation 90 degrees clockwise; 02: Z-axis rotation 180 degrees clockwise; 03: Z-axis rotation 270 degrees clockwise; 04: Horizontal reverse installation;
07	float	00 00 80 3F	X-arm length: 1.0M
08	float	00 00 80 3F	Y-arm length: 1.0M
09	float	00 00 80 3F	Z-arm length: 1.0M
0B	float	03 00 00 00	Set the GNSS navigation system to BDS+GPS
0C	float	2B A8 1C 41	Set the gravity acceleration scale to 9.7910564 m/s²
FF		01 00 00 00	00: Indicates setting is invalid 01: Indicates setting is valid

2. CRC lookup table method calculation

It is recommended to refer directly to the example code.

Note 1: Data is transmitted in little-endian format, with the least significant byte first and the most significant byte last.

Note 2: The initial value of CRC32 is 1, and the CRC calculation does not include all data in the current frame static const uint32_t crc32_tab [] = {
0x00000000, 0x77073096, 0xee0e612c, 0x990951ba, 0x076dc419, 0x706af48f, 0xe963a535, 0x9e6495a3, 0x0edb8832, 0x79dcb8a4, 0xe0d5e91e, 0x97d2d988,

0x09b64c2b,	0x7eb17cbd,	0xe7b82d07,	0x90bf1d91,	0x1db71064,
0x6ab020f2,				
0xf3b97148,	0x84be41de,	0x1adad47d,	0x6ddde4eb,	0xf4d4b551,
0x83d385c7,				
0x136c9856,	0x646ba8c0,	0xfd62f97a,	0x8a65c9ec,	0x14015c4f,
0x63066cd9,				
0xfa0f3d63,	0x8d080df5,	0x3b6e20c8,	0x4c69105e,	0xd56041e4,

0xa2677172,				
0x3c03e4d1,	0x4b04d447,	0xd20d85fd,	0xa50ab56b,	0x35b5a8fa,
0x42b2986c,				
0xdbbbc9d6,	0xacbcf940,	0x32d86ce3,	0x45df5c75,	0xdcd60dcf,
0xabd13d59,				
0x26d930ac,	0x51de003a,	0xc8d75180,	0xbfd06116,	0x21b4f4b5,
0x56b3c423,				
0xcfba9599,	0xb8bda50f,	0x2802b89e,	0x5f058808,	0xc60cd9b2,
0xb10be924,				
0x2f6f7c87,	0x58684c11,	0xc1611dab,	0xb6662d3d,	0x76dc4190,
0x01db7106,				
0x98d220bc,	0xefd5102a,	0x71b18589,	0x06b6b51f,	0x9fbfe4a5,
0xe8b8d433,				
0x7807c9a2,	0x0f00f934,	0x9609a88e,	0xe10e9818,	0x7f6a0dbb,
0x086d3d2d,				
0x91646c97,	0xe6635c01,	0x6b6b51f4,	0x1c6c6162,	0x856530d8,
0xf262004e,				
0x6c0695ed,	0x1b01a57b,	0x8208f4c1,	0xf50fc457,	0x65b0d9c6,
0x12b7e950,				
0x8bbeb8ea,	0xfcb9887c,	0x62dd1ddf,	0x15da2d49,	0x8cd37cf3,
0xfbd44c65,				
0x4db26158,	0x3ab551ce,	0xa3bc0074,	0xd4bb30e2,	0x4adfa541,
0x3dd895d7,				
0xa4d1c46d,	0xd3d6f4fb,	0x4369e96a,	0x346ed9fc,	0xad678846,
0xda60b8d0,				
0x44042d73,	0x33031de5,	0xaa0a4c5f,	0xdd0d7cc9,	0x5005713c,
0x270241aa,				
0xbe0b1010,	0xc90c2086,	0x5768b525,	0x206f85b3,	0xb966d409,
0xce61e49f,				
0x5edef90e,	0x29d9c998,	0xb0d09822,	0xc7d7a8b4,	0x59b33d17,
0x2eb40d81,				
0xb7bd5c3b,	0xc0ba6cad,	0xedb88320,	0x9abfb3b6,	0x03b6e20c,
0x74b1d29a,				
0xead54739,	0x9dd277af,	0x04db2615,	0x73dc1683,	0xe3630b12,
0x94643b84,				
0x0d6d6a3e,	0x7a6a5aa8,	0xe40ecf0b,	0x9309ff9d,	0x0a00ae27,
0x7d079eb1,				
0xf00f9344,	0x8708a3d2,	0x1e01f268,	0x6906c2fe,	0xf762575d,
0x806567cb,				
0x196c3671,	0x6e6b06e7,	0xfed41b76,	0x89d32be0,	0x10da7a5a,

0x67dd4acc,				
0xf9b9df6f,	0x8ebeeff9,	0x17b7be43,	0x60b08ed5,	0xd6d6a3e8,
0xa1d1937e,				
0x38d8c2c4,	0x4fdff252,	0xd1bb67f1,	0xa6bc5767,	0x3fb506dd,
0x48b2364b,				
0xd80d2bda,	0xaf0a1b4c,	0x36034af6,	0x41047a60,	0xdf60efc3,
0xa867df55,				
0x316e8eef,	0x4669be79,	0xcb61b38c,	0xbc66831a,	0x256fd2a0,
0x5268e236,				
0xcc0c7795,	0xbb0b4703,	0x220216b9,	0x5505262f,	0xc5ba3bbe,
0xb2bd0b28,				
0x2bb45a92,	0x5cb36a04,	0xc2d7ffa7,	0xb5d0cf31,	0x2cd99e8b,
0x5bdeae1d,				
0x9b64c2b0,	0xec63f226,	0x756aa39c,	0x026d930a,	0x9c0906a9,
0xeb0e363f,				
0x72076785,	0x05005713,	0x95bf4a82,	0xe2b87a14,	0x7bb12bae,
0x0cb61b38,				
0x92d28e9b,	0xe5d5be0d,	0x7cdcefb7,	0x0bdbdf21,	0x86d3d2d4,
0xf1d4e242,				
0x68ddb3f8,	0x1fda836e,	0x81be16cd,	0xf6b9265b,	0x6fb077e1,
0x18b74777,				
0x88085ae6,	0xff0f6a70,	0x66063bca,	0x11010b5c,	0x8f659eff,
0xf862ae69,				
0x616bffd3,	0x166ccf45,	0xa00ae278,	0xd70dd2ee,	0x4e048354,
0x3903b3c2,				
0xa7672661,	0xd06016f7,	0x4969474d,	0x3e6e77db,	0xaed16a4a,
0xd9d65adc,				
0x40df0b66,	0x37d83bf0,	0xa9bcae53,	0xdebb9ec5,	0x47b2cf7f,
0x30b5ffe9,				
0xbdbdf21c,	0xcabac28a,	0x53b39330,	0x24b4a3a6,	0xbad03605,
0xcdd70693,				
0x54de5729,	0x23d967bf,	0xb3667a2e,	0xc4614ab8,	0x5d681b02,

0x2a6f2b94,
0xb40bbe37, 0xc30c8ea1, 0x5a05df1b, 0x2d02ef8d, }
uint32_t crc_crc32 (uint32_t crc, const uint8_t *buf, uint32_t size) { for (uint32_t i=0; i<size ; i++) {

crc = crc32_tab [(crc ^ buf [i]) & 0xff] ^ (crc >> 8) ; }
return crc; }